WAVETEK

WAVETEK CORP., INSTRUMENTS DIVISION
9045 Balboa Ave., San Diego, CA 92123
Tel: (619) 279-2200, FAX: (619) 565-9558

OPERATION & MAINTENANCE MANUAL

Model 19

2 MHz Sweep/Function Generator

WAVETEK

OPERATION AND
MAINTENANCE MANUAL

Model 19

2 MHz Sweep/Function Generator

© 1992 Wavetek

This document contains information proprietary to Wavetek and is provided solely for instrument operation and maintenance. The information in this document may not be duplicated in any manner without the prior approval in writing from Wavetek.

WAVETEK®
WAVETEK INSTRUMENTS DIVISION
9045 Balboa Ave., San Diego, CA 92123
P. O. Box 85265, San Diego, CA 92138
Tel 619/279-2200 FAX 619/565-9558

Manual Revision: B, 9/92
Manual Part Number: 1006-00-0684
Instrument Part Number: 1000-00-0684

WARRANTY

Wavetek warrants that all products manufactured by Wavetek conform to published Wavetek specifications and are free from defects in materials and workmanship for a period of one (1) year from the date of delivery when used under normal conditions and within the service conditions for which they were furnished.

The obligation of Wavetek arising from a Warranty claim shall be limited to repairing, or at its option, replacing without charge, any product which in Wavetek's sole opinion proves to be defective within the scope of the Warranty. In the event Wavetek is not able to modify, repair or replace non-conforming defective parts or components to a condition as warrantied within a reasonable time after receipt thereof, Buyers shall be credited for their value at the original purchase price.

Wavetek must be notified in writing of the defect or nonconformity within the Warranty period and the affected product returned to Wavetek's factory or to an authorized service center within (30) days after discovery of such defect or nonconformity.

For product warranties requiring return to Wavetek, products must be returned to a service facility designated by Wavetek. Buyer shall prepay shipping charges, taxes, duties and insurance for products returned to Wavetek for warranty service. Except for products returned to Buyer from another country, Wavetek shall pay for return of products to Buyer.

Wavetek shall have no responsibility hereunder for any defect or damage caused by improper storage, improper installation, unauthorized modification, misuse, neglect, inadequate maintenance, accident or for any product which has been repaired or altered by anyone other than Wavetek or its authorized representative and not in accordance with instructions furnished by Wavetek.

Exclusion of Other Warranties

The Warranty described above is Buyer's sole and exclusive remedy and no other warranty, whether written or oral, is expressed or implied. Wavetek specifically disclaims the implied warranties of merchantability and fitness for a particular purpose. No statement, representation, agreement, or understanding, oral or written, made by an agent, distributor, representative, or employee of Wavetek, which is not contained in the foregoing Warranty will be binding upon Wavetek, unless made in writing and executed by an authorized Wavetek employee. **Under no circumstances shall Wavetek be liable for any direct, indirect, special, incidental, or consequential damages, expenses, losses or delays (including loss of profits) based on contract, tort, or any other legal theory.**

SAFETY FIRST

Protect yourself. Follow these precautions:

- Don't touch the outputs of the instrument or any exposed test wire carrying the output signals. This instrument can generate hazardous voltages and currents
- Don't bypass the power cord's ground lead with two-wire extension cords or plug adapters.
- Don't disconnect the green and yellow safety-earth-ground wire that connects the ground lug of the power receptacle to the chassis ground terminal (marked with ⏚ or ⚠).
- Don't hold your eyes extremely close to an RF output for a long time. The normally nonhazardous low-power RF energy generated by the instrument could possibly cause eye injury.
- Don't plug in the power cord until directed to by the installation instructions.
- Don't repair the instrument unless you are a qualified electronics technician and know how to work with hazardous voltages.
- Pay attention to the **WARNING** statements. They point out situations that can cause injury or death.
- Pay attention to the CAUTION statements. They point out situations that can cause equipment damage.

This instrument has been designed and tested in accordance with IEC Publication 348, Safety Requirements for Electronic Measuring Apparatus, and has been supplied in a safe condition. This instrument manual contains some information and warnings which have to be followed by the user to ensure safe operation and to retain the instrument in safe condition.

CONTENTS

SECTION 1 GENERAL DESCRIPTION

1.1 THE MODEL 19 1-1
1.2 SPECIFICATIONS 1-1
1.2.1 Waveforms 1-1
1.2.2 Frequency 1-1
1.2.3 Sweep Generator 1-1
1.2.4 Amplitude Modulation 1-2
1.2.5 Precision (Display Accuracy) 1-2
1.2.6 Waveform Characteristics 1-2
1.2.7 Time Symmetry 1-2
1.2.8 Input 1-2
1.2.9 Outputs 1-3
1.3 GENERAL 1-3
1.3.1 Power Requirements 1-3
1.3.2 Environmental 1-3
1.3.3 Size 1-3
1.3.4 Weight 1-3

SECTION 2 INSTALLATION

2.1 MECHANICAL INSTALLATION 2-1
2.2 ELECTRICAL INSTALLATION 2-1
2.2.1 Power Connection 2-1
2.2.2 Signal Connections 2-2
2.3 OPERATIONAL VERIFICATION 2-2
2.3.1 Checkout Procedure 2-2

SECTION 3 OPERATION

3.1 CONTROLS AND CONNECTORS 3-1
3.2 OPERATION 3-3
3.2.1 Function Generator Operation 3-3
3.2.2 Sweep Generator Operation 3-5
3.2.3 Using the Amplitude Modulator 3-5
3.2.4 Using the External Sweep Input 3-6

SECTION 4 CIRCUIT DESCRIPTION

4.1 FUNCTIONAL DESCRIPTION 4-1
4.2 CIRCUIT DESCRIPTIONS 4-2
4.2.1 Mains Operating Voltage 4-2
4.2.2 DC Regulation 4-2
4.2.3 Summing Amplifier and Current Sources 4-2

CONTENTS (Continued)

4.2.4 Range Selection and Triangle Amplifier 4-2
4.2.5 Comparator and Aux Output 4-2
4.2.6 Waveform Shaping 4-3
4.2.7 Preamplifier 4-3
4.2.8 Output Amplifier 4-3
4.2.9 Amplitude Modulator 4-3
4.2.10 Sweep 4-3
4.2.11 Digital Display 4-4

SECTION 5 CALIBRATION

5.1 FACTORY REPAIR 5-1
5.2 REQUIRED TEST EQUIPMENT 5-1
5.3 CALIBRATION 5-1
5.3.1 Alignment Procedure 5-1

SECTION 6 TROUBLESHOOTING

6.1 FACTORY REPAIR 6-1
6.2 BEFORE YOU START 6-1
6.2.1 Isolating a Problem 6-1
6.2.2 Standard Front Panel Settings 6-4
6.3 TROUBLESHOOTING GUIDES 6-4
6.3.1 Mains and Power Supply 6-4
6.3.2 Current Sources 6-5
6.3.3 Ranges/Triangle Amplifier 6-6
6.3.4 Comparator 6-7
6.3.5 Sine/Square Shaping 6-7
6.3.6 Preamplifier 6-7
6.3.7 Output Amplifier/DC Offset 6-8
6.3.8 Amplitude Modulator 6-8
6.3.9 Sweep/Ramp Generator 6-9
6.3.10 Log Converter 6-10
6.3.11 Digital Display 6-10
6.4 TROUBLESHOOTING INDIVIDUAL COMPONENTS 6-12

SECTION 7 PARTS AND SCHEMATICS

7.1 DRAWINGS 7-1
7.2 ERRATA 7-1
7.3 ORDERING PARTS 7-1

Figure 1-1. Model 19 2 MHz Sweep Function Generator.

SECTION 1
GENERAL DESCRIPTION

1.1 THE MODEL 19

The Model 19, 2 MHz function generator, is a precision source of sine, triangle, ramp, and pulse waveforms plus DC output. A TTL/CMOS output is also provided.

The frequency range is 0.002 Hz to 2 MHz selected by a seven decade range multiplier and calibrated vernier. Both the frequency vernier and the sweep input can control up to 1000:1 frequency change within a selected range.

The generator output level is 20 Vp-p maximum from a 50Ω source. The level is set via a switched attenuator plus vernier with a total range of 50 dB. DC offset is vernier adjustable over a ±10V range with center detent for 0V. A 9:1 symmetry range permits ramp and pulse waveforms to be produced.

The Model 19 has internal LIN/LOG sweep with sweep output. An external sweep input provides voltage control of generator frequency. The unit also has digital readout of frequency, amplitude and offset with high resolution and fast update across the frequency range. Amplitude modulation of up to 100% is possible, using the internal 400 Hz oscillator or an external source.

This instrument has been designed and tested in accordance with IEC Publication 348, Safety Requirements for Electronic Measuring Apparatus, and has been supplied in a safe condition. This instruction manual contains some information and warnings which have to be followed by the user to ensure safe operation and to retain the instrument in safe condition.

1.2 SPECIFICATIONS

1.2.1 Waveforms

Selectable sine, triangle, square, or dc output (by releasing all three buttons). Variable time symmetry control gives variable duty cycle pulse and ramp waveforms. A TTL pulse is always available.

1.2.2 Frequency

Frequency Ranges: 0.002 Hz to 2 MHz in 7 overlapping decade ranges with 1000:1 adjustment by a vernier, as follows:

2	0.002 to 2 Hz
20	0.02 to 20 Hz
200	0.2 to 200 Hz
2k	2 Hz to 2 kHz
20k	20 Hz to 20 kHz
200k	200 Hz to 200 kHz
2 M	2 kHz to 2 MHz

1.2.3 Sweep Generator

Internal

An internal triangular generator will continuously sweep the main generator frequency from the lower setting (Start) to the upper setting (Stop) and back. Sweep start and stop frequencies set and displayed at the press of a button.

Sweep Range:	Up to 1000:1 within each range.
Sweep Rate:	Adjustable, 30 ms to 15 s (typically 20 ms to 20 s).
Sweep Mode:	Linear or logarithmic.

External
An external dc or ac signal applied to the AM/SWEEP IN input voltage controls the frequency, Frequency Modulates, or sweeps the main generator frequency. External frequency control is accomplished with a dc voltage which adds to or subtracts from the vernier setting. An external bipolar signal deviates (FMs) the frequency around the center frequency set by the vernier, and external ramps sweep the generator. See AM/SWEEP IN specification.

1.2.4 Amplitude Modulation

Instantaneous amplitude of selected waveform (carrier) is modulated by an internal 400 Hz oscillator or external signal applied to the AM/SWEEP IN connector.

Depth: Variable 0 to 100%

1.2.5 Precision (Display Accuracy)

Frequency: ± 5 digits on 2 kHz to 2 MHz ranges; ≤ 1.5% of full scale on 2 Hz to 200 Hz ranges.

Amplitude: Typically 5% of range at 1 kHz (see flatness specification).

DC offset: Typically 2% of reading + 100 mV.

Resolution: 0.05% maximum on all ranges (1 part in 2000)

1.2.6 Waveform Characteristics

Sine

Distortion: Less than 1% on 200, 2k and 20k ranges; less than 1.5% on 20 and 200k ranges; all harmonics >25 dB below fundamental on 2M range.

Amplitude Flatness: ±0.1 dB to 200 kHz; ±1 dB to 2 MHz for 5 Vp-p output, referenced to 1 kHz.

Triangle

Linearity: Better than 99% to 200 kHz

Square

Rise and Fall Times: <100 ns

Aberrations: <5% p-p at full output

Time Symmetry: 50% ± 1% to 100 kHz, symmetry control off.

DC Offset and DC Output
DC OFFSET control sets the waveform offset of the selected waveform or dc output (no waveform selected). Control detent provides no offset position. Range is ±10v maximum offset plus signal peak from a 50Ω source (±5V maximum into 50Ω). DCoffset plus waveform attenuated proportionally by -20 dB attenuator.

1.2.7 Time Symmetry

Symmetry Range: Variable typically between 1:9 to 9:1, frequency divided by 10 (frequency uncalibrated with symmetry on).

1.2.8 Input

AM/SWEEP IN
Female BNC input accepts external voltage or bipolar signal for frequency or amplitude modulation of the main generator.

Input Impedance: 10 kΩ

Maximum Allowable Input Voltage: ±10 V

As a Sweep or FM Input

FM Sensitivity: 25% of full scale per volt (±8% accuracy).

Sweep Linearity: Better than 1%

Max. Slew Rate: 0.1V/us

As an AM Input

AM Sensitivity: Adjustable from 0 to at least 30% of full scale per volt (0 to 40% typical)

AM Bandwidth: DC to 100 kHz

1.2.9 Outputs

MAIN OUT
Source of selected function at 50 Ω output impedance. Two switch-selectable ranges with 30dB vernier control within each attenuator range. Peak output current is 100 mA maximum into 50Ω. Output is protected against a short circuit.

0 dB Range: 0.6 V to 20 V peak-to-peak from 50Ω (0.3V to 10V into 50Ω).

-20 dB Range: 60mV to 2V peak-to-peak (30 mV to 1 V into 50Ω).

AUX OUT (TTL)
TTL level pulse at the main generator frequency. Occurs at the same phase and time symmetry as the square function. Capable of driving CMOS and 2 standard TTL loads. Output is short circuit protected.

SWEEP OUT
Triangular shaped waveform output active during internal sweep. Indicates instantaneous position within a sweep. Zero to +6 V from 600 Ω. Linear waveform regardless of LIN/LOG setting of sweep generator. Used as a horizontal drive signal for strip chart recoders or X-Y oscilloscopes. Output is short circuit protected.

1.3 GENERAL

1.3.1 Power Requirements

The Model 19 has two line voltage configurations. In the usual configuration, the "115/230" line voltage switch selects between 115 volts AC nominal 50/60 Hz or 230 volts AC nominal, 50/60 Hz. In the Japan configuration (identified with rear panel label), the "115/230" line voltage switch selects between 100 volts AC nominal 50/60 Hz or 230 volts AC nominal, 50/60 Hz.

The instrument will operate safely and meet specification within normal AC supply variations of approximately ±10% of nominal.

Power Consumption: 15 VA max.

1.3.2 Environmental

Operating Range: +5°C to +40°C, 20% to 80% RH.

Storage Range: -10°C to +65°C

Warm-up time: 20 minutes for specified operation

Altitude: Sea level to 10,000 feet for operation, 15,000 feet for storage.

Relative Humidity: 20% to 80%

Cooling: Natural convection

Safety: Designed and type tested to IEC-348.

1.3.3 Size

260 (W) x 88 (H) x 235 (D) mm (10.2 x 3.4 x 9.2"), excluding handle and feet.

1.3.4 Weight

1.9 kg (4.2 lb)

NOTE

Specifications apply for the top decade of each frequency range and output 10 V peak-to-peak into 50 Ω termination.

SECTION 2
INSTALLATION

2.1 MECHANICAL INSTALLATION

After unpacking the instrument, visually inspect all external parts for possible damage to connectors, surface areas, etc. If damage is discovered, file a claim with the carrier who transported the unit. The shipping container and packing material should be saved in case reshipment is required. Call Wavetek's Customer Service representative (619/279-2200) to inform them that the shipment arrived damaged.

2.2 ELECTRICAL INSTALLATION

2.2.1 Power Connection

The Model 19 is supplied with one of three power cords, depending upon destination. Units shipped into Europe require part #22491-0020, and the UK models (with stripped and tinned bare leads) require part #22491-0010. Units shipped from the US and into Japan will use part #22491-0070.

WARNING

To preclude injury or death due to shock, the third wire earth ground must be continuous to the facility power outlet. Before connecting to the facility power outlet, examine extension cords, autotransformers, etc., between the instrument and the facility power outlet for a continuous earth ground path. The earth ground path can be identified at the plug on the instrument power cord; of the three terminals, the earth ground terminal is the nonmatching shape, usually cylindrical.

CAUTION

To prevent damage to the instrument, check for proper match of line and instrument voltage and proper fuse type and rating.

NOTE

As specified at the time of purchase, the Model 19 was shipped configured in one of three line supply configurations as detailed in Table 2-1. "Japan" units wired for 100 VAC operation are identified with a rear panel label. Verify that the 115/230 Vac line selection, fuse type and value, and power cord are appropriate for use at your facility before operating your instrument.

Table 2-1. Voltage/Fuse Selection

Connector Position	Voltage Range	Fuse
115 Vac (Japan)	100 Vac ± 10%	250 mAT*
115 Vac	115 Vac ± 10%	250 mAT*
230 Vac	230 Vac ± 10%	125 mAT*

*Use only time-lag (Slo-Blow) fuses. Changing the 115/230 line selector position requires changing the fuse value. Both fuse values are installed in the fuse holder in the line entry module on the rear panel, with the value not in use in the "SPARE" location.

WARNING

Although the line entry module and fuse holder asembly is designed to prevent contact with lethal line voltage, do not attempt to pry off the fuse cover with the power cord connected.

2.2.2 Signal Connections

Use 3 foot RG58U 50Ω shielded cables equipped with male BNC connectors to distribute all input and output signals.

2.3 OPERATIONAL VERIFICATION

This checkout procedure is a general verification of generator operation. Should a malfunction be found, call the Wavetek Customer Service representative (TEL 619/279-2200, FAX 619/565-9558). Please be prepared with your name, telephone number, company name, model number, serial number, and a description of the problem.

A two channel oscilloscope, four 3 foot 50Ω coax cables with male BNC connectors, a coax tee connector, a 50Ω termination, and an additional function generator are required for this procedure.

Power the instrument on with the rear panel power switch. Preset the generator front panel controls as follows:

Control	Position
FREQUENCY RANGE	2K
DISPLAY SELECT	"kHz"
SYM (f/10)	Off (released)
VERNIER	≈2 kHz (2.0)
FUNCTION	Square
AMPLITUDE	Max (cw)
DC OFFSET	Off (center detent)
ATTENUATOR	0 dB (released)
AMPLITUDE MODULATION	OFF
SWEEP RATE (PULL FOR ON)	OFF

Set up the oscilloscope and the Model 19 as shown in figure 2-1.

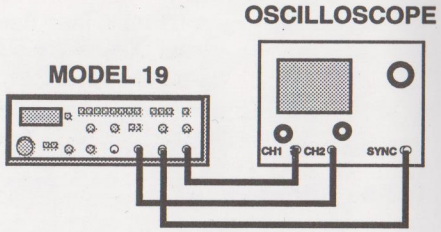

Figure 2-1. First Setup

2.3.1 Checkout Procedure

1. With Model 19 power on, all controls preset per paragraph 2.3, and connected to the oscilloscope as shown in Figure 2-1, verify two cycles of square waveform on scope. Scope CH1 is terminated into 50Ω, CH2 is unterminated (high impedance), horizontal is 0.1 ms/div and vertical is 2V/div. Verify scope syncs externally to the AUX OUT (TTL).
2. Observe the frequency readout on the display and rotate the FREQUENCY vernier ccw (lower frequency) and cw (higher frequency). Verify scope waveform follows displayed frequency. Return vernier to approximately 2 kHz.
3. Press each FREQUENCY RANGE (Hz) button from 2 to 2M and verify scope and display readout for decade changes. Reset range to 20 kHz.
4. Press the SYM (f/10) button and verify frequency drop from approximately 20 kHz to approximately 2 kHz. Rotate symmetry control from ccw to cw and observe an approximate 1:9 to 9:1 time symmetry variation of the square.
5. Release the SYM (f/10) button and reselect 2k FREQUENCY RANGE. Press each FUNCTION button and observe proper waveshapes. Release all three buttons and verify 0 Vdc level.

6. Press Display Select button twice to activate "DC" units. Verify approximate 0 Vdc reading (with DC OFFSET knob in its center detent). Rotate the DC OFFSET knob from fully ccw to fully cw while observing both the scope and the display reading. Range is at least –10 Vdc to +10 Vdc OPERN CIRCUIT (±5 Vdc with the 50Ω termination. Return the knob to its center detent and select the triangle wave.
7. Press the Display Select button twice more to activate the Vp-p units. An "O.L" reading is normal with the AMPLITUDE knob fully cw. Rotate the AMPLITUDE knob throughout its range and observe the scope and display readout. Amplitude range is from approximately 0.5 Vp-p to 20 Vp-p and slightly beyond to "O.L". The amplitude displayed on the scope will be half of the display value with the 50Ω termination in, and equal to the displayed setting open circuit. Press the ATTENUATOR button and verify a 10:1 drop in amplitude at the scope. Release the ATTENUATOR button.
8. Press the Display Select switch twice to get the "KHz" display. Press the 20k FREQUENCY RANGE and pull out the SWEEP RATE knob to turn on the sweep generator. Press and hold the SET START button, and rotate the FREQUENCY (START) vernier fully ccw for a sweep start frequency of approximately 20 Hz. Press and hold the SET STOP button and rotate the STOP knob for a sweep stop frequency of approximately 20 kHz.
9. Adjust the RATE knob for a slow up/down sweep display on the scope. Observe both the linear and logarithmic sweeps by pulling out and pushing in the SWEEP STOP knob.
10. Set the scope to alternate display of CH1 and CH2, set CH2 for 2 V/div vertical, and observe the sweep contol voltage simultaneously with the resulting sweep. Reset the scope for CH1 only. Press in on the RATE knob to stop the sweep and set the frequency vernier cw to approximately 20 kHz.
11. Set the AMPLITUDE MODULATION gain knob fully ccw (0% AM), and press the ON/OFF button to enable AM. Ensure EXT/INT button is released (INT). Observe an approximate 2:1 drop in amplitude on the scope.
12. Set the scope for internal triggering and set horizontal to 1 ms/div. Bring the AM gain knob cw and observe 100% at approximately mid-scale on the knob. Adjust the scope trigger level as necessary to obtain stable triggering on the 400 Hz, sinusiodal AM envelope.
13. Connect the Model 19 and test equipment according to Figure 2-2.

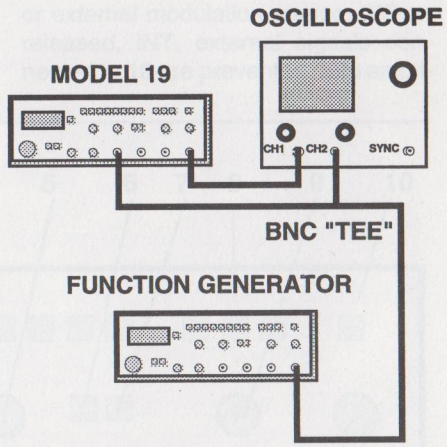

Figure 2-2. Second Setup.

14. Set the scope for alternate display of CH1 and CH2 and trigger from CH2, the external signal. Set up the external function generator for a 1 kHz, 4 Vp-p triangle. Observe the 400 Hz, sinusoi-

dal ≈100% AM of the previous step with EXT/INT released. Press EXT/INT and verify that the AM envelope changes to the 1 kHz trianglar waveform of the external generator.

15. Release the AM ON/OFF button to select the AM/SWEEP IN input as an FM input. Observe and trigger from CH1 only on the scope, horizontal set to 10 µs/div. Verify FMing of waveform. Depress EXT/INT button and verify external FM input is disconnected.

This completes the Operational Verification Test. Sucessful completion indicates that your Model 19 is ready for operation. Disconnect test equipment.

SECTION 3 OPERATION

3.1 CONTROLS AND CONNECTIONS

The generator front panel controls and connectors are shown in Figure 3-1 and keyed to the following descriptions:

1 **Display** – LCD readout of parameter an unit selected by **2**.

2 **Display Select** – Momentary push button, selects **1** readout in frequency (Hz or kHz), waveform amplitude (Vp-p), or waveform offset/dc output (DC).

3 **SYMMETRY and SYM (f/10)** – Push button turns waveform variable symmetry on and off. When off, waveform time symmetry is fixed at 50%. When on, frequency range setting **4** is divided by 10 and time symmetry is continuously variable SYMMETRY knob **3** from approximately 1:9 to 9:1.

4 **FREQUENCY RANGE Hz** – Selects one of seven frequency decades for **11** frequency vernier.

5 **AM Gain** – Knob continuously adjusts internal or external AM from 0% to maximum.

6 **EXT/INT** – Push button selects internal or external modulation source. When released, INT, external signals connected to **16** are prevented from ampli-

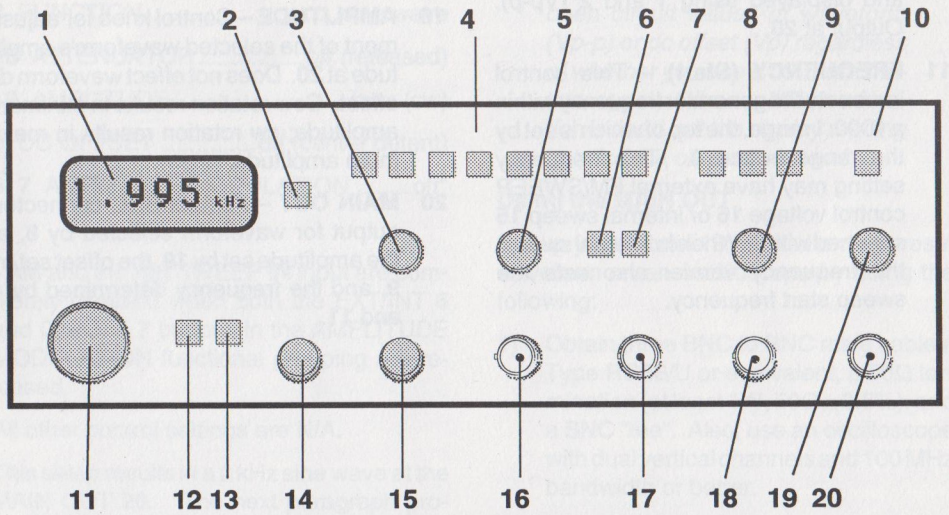

Figure 3-1. Controls and Connectors

tude or frequency modulating the main generator. If AM ON/OFF **7** is on (depressed), the internal 400 Hz oscillator AMs the selected waveform by an amount determined by **5**. If EXT/INT is external (depressed), the signal at **16** is enabled to modulate the generator. If **7** is OFF, the signal will FM or sweep generator frequency. If **7** is ON, the signal will AM the selected waveform by an amount set by **5**.

7 **ON/OFF** – Push button enables internal or external AM when depressed.

8 **FUNCTION** – Push buttons select either sine, triangle, or square functions. When all three are released, the function is DC.

9 **DC OFFSET** – Control knob to set the dc offset of the selected waveform or generator dc output when no waveform is selected. Ccw rotation is negative; cw rotation is positive. Center detent position adjusted for no offset.

10 **ATTENUATOR (-20 dB)** – Push button selects no attenuation (released) or -20 dB (÷10) attenuation of the waveform amplitude set by **19** and displayed using **1** and **2** (Vp-p). Output at **20**.

11 **FREQUENCY (Start)** – This control knob sets the generator frequency within a 1000:1 range, the top of which is set by the range button **4**. This frequency setting may have external FM/SWEEP control voltage **16** or internal sweep **15** summed with it. When in internal sweep, the frequency vernier also sets the sweep start frequency.

12 **SET START** – Momentary push button enabled when **14** is pulled out for sweep mode. When pressed, the display **1** readout and vernier **11** are used to set sweep start frequency.

13 **SET STOP** – Momentary push button enabled when **14** is pulled out for sweep mode. When pressed, the display **1** readout and STOP knob **14** are used to set sweep stop frequency.

14 **STOP (Pull for LOG)** – Sets sweep stop frequency when **15** is pulled out (selecting internal sweep) and **13** is pressed. Value displayed on **1**.

15 **RATE (Pull for ON)** – Sets frequency of up/down sweep. Pull control to enable the internal sweep generator.

16 **AM/SWEEP IN** – Female BNC connector, input for external signal to frequency or amplitude modulate the Model 19. Enabled when **6** is depressed.

17 **SWEEP OUT** - Female BNC connector, output for sweep control voltage, enabled and rate set by **15**.

18 **AUX OUT** – Female BNC connector, output for TTL level waveform sync.

19 **AMPLITUDE** – Control knob for adjustment of the selected waveform's amplitude at **20**. Does not effect waveform dc offset. Ccw rotation results in minimum amplitude; cw rotation results in maximum amplitude.

20 **MAIN OUT** – Female BNC connector, output for waveform selected by **8**, at the amplitude set by **19**, the offset set by **9**, and the frequency determined by **4** and **11**.

3.2 OPERATION

3.2.1 Function Generator Operation

Operating the Model 19 Function Generator is best accomplished by first presetting the front panel switches and controls to a known starting point. Then proceed to select the frequency, wave form, amplitude, offset and output as described in the following paragraphs.

Presetting the controls

Connect the unit's power cord and turn the rear panel mounted power switch on. Note that the display is active. Press the Display Select **2** push button to get the "kHz" frequency readout if necessary. Preset the front panel controls as follows:

Control	Position
11 FREQUENCY (START)	2.0
14 SWEEP STOP	linear (push in)
15 SWEEP RATE	off (push in)
3 SYM	off (released)
4 FREQUENCY RANGE Hz	2k
8 FUNCTION	sine wave
10 ATTENUATOR	off (released)
19 AMPLITUDE	max (cw)
9 DC OFFSET	off (center detent)
6, 7 AMPLITUDE MODULATION	off*

* AM and the AM/SWEEP IN input are completely disabled when both the EXT/INT **6** and ON/OFF **7** buttons in the AMPLITUDE MODULATION functional grouping are released.

All other control settings are N/A.

This setup results in a 2 kHz sine wave at the MAIN OUT **20**. The next paragraph provides information on connecting your model 19 to an oscilloscope to verify control setup.

Cables and Terminations

The model 19 is capable of providing up to 20 Vp-p waveform amplitude (or up to ±10 Vpk combined peak waveform plus dc offset) form the MAIN OUT **20** into an open circuit or high impedance ≥50 kΩ. However, you will want to use a 50Ω termination in most cases. The model 19's MAIN OUT **20** has a 50Ω source impedance, and maximum transfer of power occurs when the source impedance and termination impedance are matched. Also, by using matched impedances with an RG-58/U BNC cable with a 50Ω characteristic impedance, optimum waveform quality is obtained. Additionally, the low 50Ω termination tends to swamp out the effect of varying circuit loading that appears in parallel with the termination, providing constant signal amplitude.

There is a price to pay for this impedance matching. The 50Ω source and 50Ω load act as a 2:1 voltage divider, and the maximum supplied voltage to the load is 1/2 the open circuit maximum. This results in 10 Vp-p maximum output swing.

NOTE

The calibrated display will show the open circuit values of waveform (Vp-p) or dc offset (Vp) regardless of whether you use a 50Ω termination or not. When a 50Ω termination is used, set the display reading to twice the output you need.

Using the MAIN OUT

Set up your Model 19 to monitor the preset waveform on an oscilloscope by doing the following:

1) Obtain three BNC to BNC male cables, Type RG58/U or equivalent, a 50Ω termination (at least 1W, 50Ω ± 0.5%), and a BNC "tee". Also, use an oscilloscope with dual vertical channels and 100 MHz bandwidth or better.
2) Connect a BNC cable to the MAIN OUT **20** and to the scope CH1, using a 50Ω

termination at the scope end of the cable. Set the scope to 2 V/div vertical, 0.1 ms/div horizontal, and internal triggering. Observe two sine wave cycles at 10 Vp-p.

3) Optionally, connect another BNC cable from AUX OUT **18** to the scope external trigger in and trigger the scope externally. This will provide a more stable sync under some waveform conditions.

Setting the generator frequency

If you have set up according to the previous two paragraphs, the generator frequency indicated on the display is approximately 2 kHz. Counterclockwise rotation of the FREQUENCY (Start) **11** control results in lowering the frequency, clockwise rotation increases frequency. Generator frequency is restricted to a 1000:1 range determined by which FREQUENCY RANGE Hz **4** button is depressed. The 2K button determines that the maximum frequency set by placing the vernier at "2.0" sets 2 kHz. The 1000:1 range available is 2 Hz (.002) to 2 kHz (2.0). The seven range buttons give overlapping coverage from 0.002 Hz to 2 MHz. The buttons range by decades, but each range covers three decades, so the bottom two decades of a range can be found in the top decade of the two ranges below. Three decade range coverage is generally used in more advanced modes of operation where frequency is voltage controlled or swept. **In normal operation, select a range where your frequency of interest is in the top decade of the range.** This will result in best performance of the unit. For example, your frequency of interest is 12.5 kHz. Set frequency to 12.5 kHz as follows:

1) Select a range decade that contains 12.5 kHz. Your frequency is between 2 kHz and 20 kHz, so depress the 20K range button **4**.

2) Adjust the frequency vernier **11** for 12.5 kHz. Rotate the vernier ccw to roughly between "1.2" and "1.4".

3) Observe the display readout and fine adjust the frequency vernier **11** until the display reads 12.50 kHz.

Selecting a waveform

Waveform selection is very simple. The three FUNCTION **8** buttons select between sine, square and triangle. Pressing a released switch in partially until the selected switch releases (so that all three switches are released) results in a dc output. Select each of the three waveforms and then select the triangle. The scope should display a number of triangular waveforms.

Setting waveform symmetry

Note that the triangle waveform on the scope has 50% time symmetry (each slope occupies 50% of the waveform period). This waveform can be skewed over a 1:9 to a 9:1 (15% to 85%) range using the SYM **3** button and the SYMMETRY **3** control as follows:

1) Press the SYM **3** button. Observe that the displayed frequency drops to approximately 1/10th of 12.5 kHz.

2) Rotate the SYMMETRY **3** control from fully ccw to fully cw and observe the effect on each of the three waveforms.

3) Release the SYM **3** button and return the function to triangle.

Setting waveform amplitude and offset

Verify approximately 10 Vp-p triangle waveform on the scope. Press the Display Select **2** button once to get the "Vp-p" units indicator. The display may show "O.L." This is normal. Reduce the AMPLITUDE **19** control slightly ccw until the display has ≤2000 counts. For example, when the display reads 18.00 Vp-p, the scope will show approximately 9 Vp-p (remember the 2:1 voltage divider effect of the 50Ω load). As an example, set up a 2 Vp-p sine wave riding on a +2.5 Vdc level as follows:

1) Set the AMPLITUDE **19** control ccw until the display reads 4 Vp-p (twice the desired waveform voltage). Verify 2 Vp-p on the scope.

2) Press the Display Select **2** button once to enable the "DC" units indicator. Rotate the DC OFFSET **9** control cw until the display indicates 5 Vdc.

3) Verify that the 2 Vp-p waveform on the scope is now riding on a +2.5 Vdc level.

4) Return to preset controls setup.

NOTE

*The DC OFFSET **9** control and DC readout can also be used together with the "DC" waveform to make the model 19 into an accurate source of dc voltage with a 50Ω source impedance.*

Using the AUX OUT

You would use the AUX OUT **18** as a trigger synchronization source for the MAIN OUT **20**, or as an independent output of TTL/CMOS signal levels. This signal will not reach the logic "high" level if a 50Ω termination is used.

3.2.2 Sweep Generator Operation

In the following example, instructions will be given to produce a 30 Hz to 17.5 kHz LOG sweep of a sine wave with an approximate 1 Hz sweep rate:

1) Preset the controls per paragraph 3.2.1. Then press the 20K FREQUENCY RANGE Hz **4** button, and verify that the display readout is "kHz". If not select "kHz" using the Display Select **2** button.

2) Pull the RATE (PULL FOR ON) **15** control out to turn on the sweep generator.

3) Pull the STOP (PULL FOR ON) **14** control out to set the sweep generator to a LOG vs linear sweep.

4) Press and hold the SET START **12** button for this step. Rotate the FREQUENCY (Start) **11** control fully ccw, and then bring it cw slowly until the display indicates .030 kHz (or as close as you care to get to it).

5) Press and hold the SET STOP **13** button for this step. Adjust the STOP **14** control for a reading of 17.50 kHz on the display.

6) Connect the SWEEP OUT **17** BNC to a frequency counter or to the scope to set the 1 s waveform period. Disconnect the waveform.

7) Connect the MAIN OUT **20** to the scope to observe the swept waveform.

8) Return all settings and equipment connections to preset conditions of paragraph 3.2.1.

3.2.3 Using the Amplitude Modulator

The Amplitude Modulator is capable of producing 0% to 100% AM waveforms where the function generator provides the carrier signal and either the internal 400 Hz oscillator or an external signal produces the modulation envelope. Whenever AM is selected, the output amplitude is cut in half to allow sufficient headroom for up to 100% AM without overdriving the modulator or output stages.

In the following example, instructions will be given to produce a 200 kHz sine wave carrier with first internal and then external 50% AM.

1) Preset the controls per paragraph 3.2.1. Then press the 200K FREQUENCY RANGE Hz **4** button, and verify that the display readout is "kHz". If not select "kHz" using the Display Select **2** button.

2) Connect the MAIN OUT to the scope, vertical set to 2 V/div, vertical set to 1 ms/div. Observe the carrier amplitude.

3) Set the AM gain control **5** fully ccw and press the AM ON/OFF **7** button to turn on the amplitude modulator. Verify a drop in carrier amplitude.

4) Set the scope vertical gain (variable) so that the unmodulated carrier is 4 divisions peak to peak.

5) Rotate the AM gain control **5** cw until the peak to peak amplitude modulated signal is now 6 divisions. Stabilize the scope display to the 400 Hz envelope if necessary using the trigger level control. Note that the carrier peak amplitude is now 2 divisions plus and minus 1 division, or roughly 50% AM.

6) Press the EXT/INT **6** button in and verify that the modulation returns to 0% AM.

7) Set up an external signal generator for a 4 Vp-p bipolar waveform (no dc component) at roughly 400 Hz. Connect the external generator's output to the scope external trigger input ("tee" connector) and, with a second cable to the AM/SWEEP IN **16** connector on the model 19. When the scope is externally triggered and the trigger level is set, observe approximately 50% AM.

8) Return all settings and equipment connections to preset conditions of paragraph 3.2.1.

3.2.4 Using the External Sweep Input

The external input can be used for dc voltage control of generator frequency, for frequency deviation about a center frequency (FM), or for external sweep.

DC control of frequency

In the following example, instructions will be given to preset the generator frequency to 500 Hz and then apply an external dc voltage to change frequency to 1 kHz:

1) Preset the controls per paragraph 3.2.1 and verify that the display readout is "kHz". If not select "kHz" using the Display Select **2** button.

2) Observe the 2 kHz sine wave at the MAIN OUT **20** on the scope.

3) Rotate the FREQUENCY (Start) **11** control ccw between ".4" and ".6". Then fine adjust the control for 0.500 kHz on the display.

4) Verify that both AM buttons **6, 7** are released so that external voltages applied to the AM/SWEEP IN **16** connector will be routed to the generator frequency determining circuitry. Calculate voltage polarity and magnitude required to increase frequency from 500 Hz to 1 kHz. Increasing polarity is positive. The scale factor is 25% of range per volt. The change in frequency from 500 Hz to 1000 Hz is 500 Hz, which represents 25% of the full-scale range (2k). Therefore, the required voltage should be +1V.

5) Set up an external source for +1Vdc and connect it to AM/SWEEP IN **16**. Observe the model 19 display and the scope waveform. Frequency has increased to approximately 1 kHz.

6) Leave the setup the same for testing FM.

AC frequency deviation (FM)

In the following example, instructions will be given to apply an external ac voltage to FM the 500 Hz frequency by ±100 Hz:

1) Calculate the Vp-p ac signal required for ±100 Hz FM. The change in frequency is 200 Hz, which is 10% of the full scale range of 2000 Hz. If 1V changes frequency 25% (500 Hz), then 0.4 Vp-p is the required voltage for ±100 Hz.

2) Reprogram the external source for an 0.4 Vp-p signal, with no dc offset, and a 1 Hz frequency.

3) Observe the FMed waveform on the scope. The display readout will attempt to track the frequency.

4) Leave the setup the same for testing external sweep.

External sweep

In the following example, instructions will be given to apply an external sweep voltage to sweep the entire 2 kHz range:

1) Calculate the Vp-p ac signal required for full 1000:1 sweep. The change in frequency is 2000 Hz, which is 100% of the full scale range of 2000 Hz. If 1V changes frequency 25%, then 4 Vp-p is the required voltage for the sweep.

2) Set up for a sweep from 2 Hz to 2000 Hz by setting the FREQUENCY (Start) **11** control fully ccw (2 Hz).

3) Reprogram the external generator for a 0V to +4V ramp signal at 1 Hz.

4) Observe a full range sweep which starts at a low frequency, sweeps to a high frequency and then returns to the low frequency, once per second.

5) Return all settings and equipment connections to preset conditions of paragraph 3.2.1.

This completes the description of operational setups for the model 19.

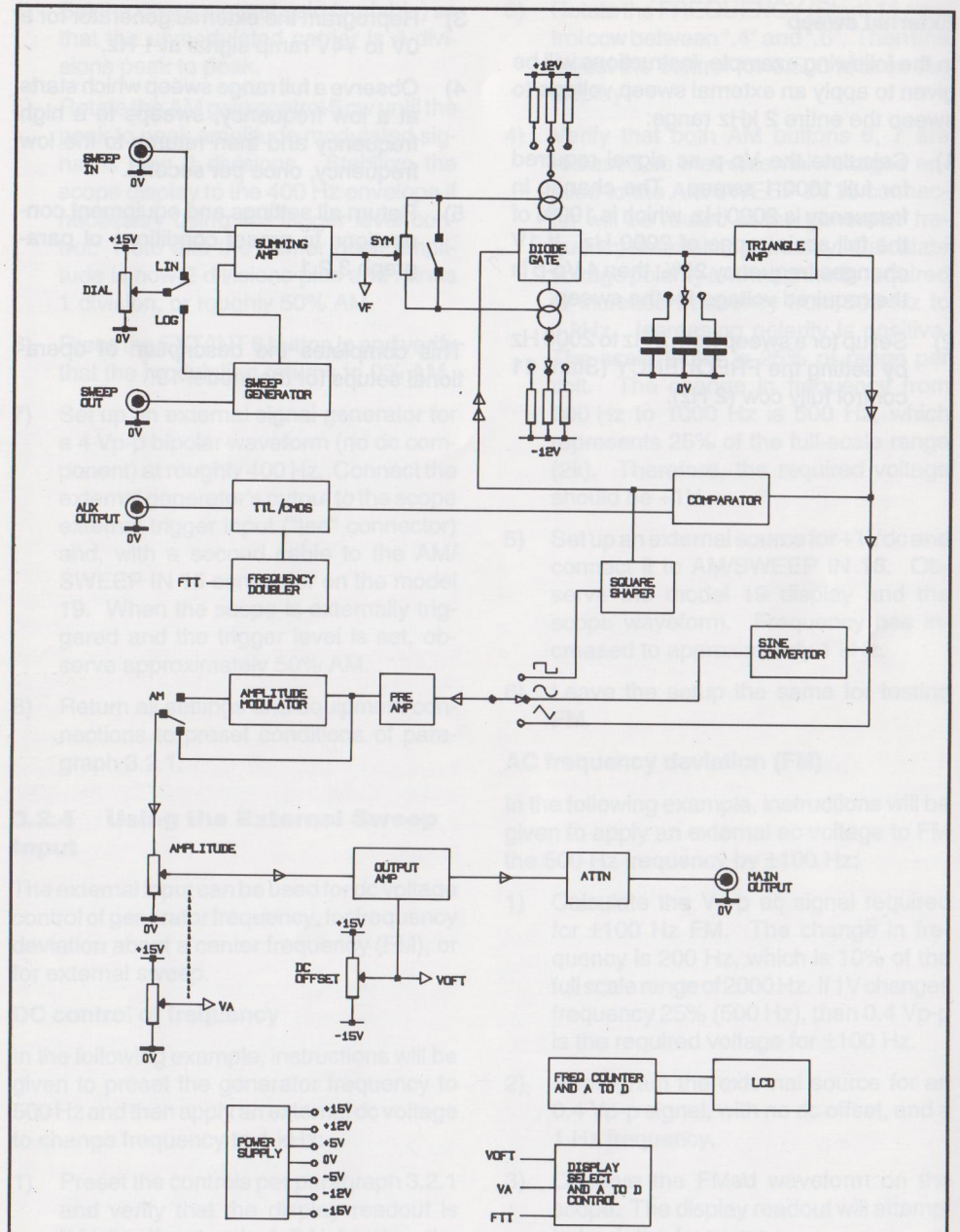

Figure 4-1. Model 19 Functional Block Diagram.

SECTION 4
CIRCUIT DESCRIPTION

4.1 FUNCTIONAL DESCRIPTION

The relationships between the major circuit elements are shown in the block diagram, Figure 4-1.

The summing amplifier sums the voltages from the dial, sweep input and the sweep board and its output controls the magnitude of the complimentary current source and current sink. This current varies from approximately 1.7 µA to 1.7 mA for a 1000:1 frequency change (.002 - 2.0). The symmetry control adjusts the ratio between the current source and current sink.

The diode gate steers current into and out of the range multiplier capacitor and is controlled by the comparator output. When the comparator output is high the charge on the capacitor will rise, linearly, producing the positive going triangle slope. When the comparator output is low the charge on the capacitor will fall linearly producing the negative going triangle slope.

The triangle amplifier has unity gain and buffers the triangle wave on the multiplier capacitor to drive the comparator and output circuits.

The comparator operates as a window detector with fixed limit points set to the triangle peaks. One of its two outputs drives the TTL/CMOS output. The other output is level shifted to drive the diode gate and square wave shaper. When the comparator output to the diode gate is high the triangle wave is positive going until this reaches approximately +1V, when the comparator output switches low. When the comparator output is low the triangle wave is negative going until it reaches approximately -1V, when the comparator goes high, and the cycle is repeated. This basic function generator loop is shown by the double arrows in the block diagram. Triangle and square wave are generated simultaneously as shown.

To achieve the 20 Hz and 2 Hz ranges, the currents into the diode gate are divided by 10 and 100 respectively.

The sine wave converter uses the non-linear characteristics of a transistor pair to convert the triangle wave into a sine wave. The selected function is amplified by the pre-amp and applied to the amplitude control directly or via the amplitude modulator. The signal is summed with the voltage from the DC offset control at the output amplifier, which amplifies the signal up to 20 V peak to peak to drive the main output socket.

The digital display measures frequency on the 2 kHz to 2 MHz ranges, and measures voltage at the summing amplifier on the 2 Hz to 200 Hz ranges. Amplitude and offset are measured in the voltage mode.

The sweep generator provides a LIN or LOG ramp of variable amplitude and speed that is fed to the summing amplifier.

The power supply converts the incoming AC line voltage to the DC rails required by the instrument.

4.2 CIRCUIT DESCRIPTIONS

4.2.1 Power Supply - Mains Operating Voltage

The operating voltage is indicated by the orientation of the fuse holder. When the 230 V marking is upwards the unit is set for operation over the range 198 V to 264 V. When the 115 V marking is upwards the unit is set for operation over the range 99 V to 132 V. To change the operating voltage range, remove the AC line plug, pull out the fuse holder, replace the fuse with one of the appropriate rating (see below) and rotate the fuse holder before pushing it firmly back into place. (The transformer is also tapped at 100 V for special requirements).

The correct fuse must be fitted after an operating voltage change. Only a time-lag fuse should be fitted. For 230 V operation use 125 mA 250 V time-lag. For 115 V operation use 250 mA 250 V time-lag.

WARNING !

THIS INSTRUMENT MUST BE EARTHED

Any interruption of the protective conductor inside or outside the instrument or disconnection of the protective earth terminal is likely to make the apparatus dangerous. Intentional interruption is prohibited.

4.2.2 Power Supply - DC Regulation

Diode bridge comprising D32 to D35 rectifies the transformer output and C32 and C33 are the reservoir capacitors which supply the ±15 V regulators; fine adjustment is provided by VR16 and VR17.

The ±12 V rails are derived from the ±15 V rails with D37 and D39. IC24 is a +5V regulator and D2 generates the -5V.

4.2.3 Waveform Generation - Summing Amplifier and Current Sources

The dial and sweep voltages are summed by IC2D; the output range of the amplifier is approximately -4 mV to -4V for a 1000:1 frequency change. Q1 gives increased current drive to drive R39 and R47. When the symmetry button is depressed R39 and R47 are increased by a factor of 10 with the symmetry control in mid-position, decreasing the output frequency by a factor of 10. This allows a symmetry range of 10:1. On the 2 Hz to 200 Hz ranges, Q33 and IC17B signal the voltmeter to divide by 10 in frequency mode.

IC2C refers the output of IC2D to the +12V rail, IC4 and Q5 mirror this into the diode gate. IC2A inverts the output of IC2D, IC2B refers it to the -12V rail, IC9 and Q17 mirror this into the diode gate.

4.2.4 Waveform Generation - Range Selection and Triangle Amplifier

Ranges 200 Hz to 2 MHz use decade steps of range capacitor. The 20 Hz range uses C11 and reduces the charging current one decade by selecting R61 and R51; the 2 Hz range also uses C11 and reduces the charging current by a another decade by selecting R59 and R50.

The triangle amplifier uses Q7 as a source follower and Q8 as a current source; Q7 and Q8 are Idss matched. Q9 is an emitter follower to give low output impedance. The stage has unity gain and the offset is trimmed by VR5.

4.2.5 Waveform Generation - Comparator and Aux Output

IC5 operates as a window detector and determines the peak to peak amplitude of the triangle wave on the range capacitor, which is approximately ±1V. Capacitors C15 to C19 compensate for comparator delay ensuring that the triangle wave amplitude remains constant with increase in frequency. The two internal NAND gates in IC5 are wired as a flip-flop to ensure positive switching of the comparator. C71 and C77 provide a small amount of positive feedback to ensure jitter-free operation. Q6 level shifts the output of IC5 to be about ground, to drive the diode gate. IC6 drives the Aux Output with a TTL/CMOS compatible signal.

4.2.6 Waveform Generation - Waveform Shaping

The sine shaper comprises a monolithic transistor array IC12 which is driven by the triangle amplifier. The circuit has two non linear stages. A pair of emitter followers A and D round the peaks of the triangle; the output of this stage is impressed across R80 and R82 in series and applied to the second stage. This comprises a differential pair B and C driven almost into cut-off and converts the clipped triangle into a sine wave. VR7 adjusts the gain of this pair to bring them close to cut off and therefore minimum sine wave distortion. VR27 adjusts the dc operating point of the sine wave converter to give symmetrical operation on both positive and negative halves of the waveform.

The square wave shaper is a diode bridge D13 to D16, driven by a level shifter Q10, which steers current into and out of R55 and C61. This gives a clean waveform which is symmetrical about ground. When square wave is not selected SW10B connects R77 to +5V turning off Q10.

4.2.7 Preamplifier

The selected waveform passes to the preamplifier. Q19 and Q20 form a differential pair and are in thermal contact. Emitter followers Q21 and Q22 give low output impedance and gain is set by feedback resistor R163. The amplifier is inverting.

4.2.8 Output Amplifier

The output amplifier is non-inverting. Q23 and Q24 form a differential pair and are in thermal contact. Q25 operates in common base and forms a cascode stage in conjunction with Q24. The collector load for Q25 is current source Q27. Q26 and Q28 are complementary emitter followers. The gain of approximately 10 is set by R136 and R134.

The DC Offset control is buffered by IC18D and applied via R133.

4.2.9 Amplitude Modulator

When the AM button is depressed, the amplitude modulator is inserted between the preamplifier and the output amplifier. IC19 is a balanced modulator. Q29 to Q32 form a differential amplifier which amplifies the difference between the open collector outputs of IC19. IC18B is a 400Hz Wien Bridge oscillator; LP1 provides amplitude stabilization. IC18A buffers the signal on the modulation depth control VR22 and also sets the dc bias for IC19.

4.2.10 Sweep

Ramp Generator

The rate control VR20 determines the magnitude of the current source IC7A and Q18. This current is steered into and out of C54 by the operational transconductance amplifier (OTA) IC8. The voltage on C54 is buffered by IC7B to drive the stop control VR21 and the window comparator IC10A and IC10B. The thresholds of the window comparator determine the limits of the ramp which are 0V and +4V. Q13 and Q14 are level shifters to drive flip flop IC11A. The output of IC11A is level shifted by R20 and R30 and clamped by D5 and D6 to be symmetrical about 0V. When the input to IC8 is high the OTA sources current into C54; when the input is low the OTA sinks current from C54. This loop is very similar to a function generator. If either the set start or set stop buttons are

depressed the loop is closed around the ramp generator forcing the ramp to be held precisely at its lower or upper limit. IC10D buffers the signal on VR21 to drive the main board directly or via the log converter.

Log Converter

IC3D sums the output of the ramp generator and the dial in LOG mode with an offset current to drive the logging transistors IC13A and IC13B. Temperature compensation of the log converter is by TDR1 which has a temperature coefficient of +0.3%/°C. The log converter itself simply uses the exponential relationship between Vbe and collector current. IC13 is a matched transistor array. The right hand transistor is the logging transistor and its emitter is driven by the input voltage via the left hand transistor which compensates for the logging transistor Vbe. The left hand transistor's collector current is defined by R33 and is held constant by IC3A; its Vbe is therefore constant and so the input voltage at the junction of R36 and TDR1 is impressed across the Vbe of the logging transistor. The logarithmic change in collector current of the logging transistor is converted into a voltage by IC3B. The log convertor is actually an antilog converter.

4.2.11 Digital Display

IC1 is an A to D and a frequency counter combined and directly drives the triplexed LCD. Ring counter IC20 and IC21A is incremented each time the display select button is depressed, giving the 3 display modes of frequency, amplitude and offset. The frequency mode has 2 methods of measurement; on the 2k to 2M ranges the auto-ranging frequency counter is used and on the 2 to 200 Hz ranges the A to D is used to measure the dial voltage Vf. When symmetry is selected IC17B signals the A to D to divide the measured Vf voltage by 10. When IC1 is used as an A to D the decimal point is positioned by IC17D, IC17C and D25 to D28. When IC1 is used as an auto-ranging frequency counter the decimal point is automatically placed.

When amplitude is selected the A to D measures the voltage on VR11B. When offset is selected the A to D measures the voltage on the output of IC18C.

IC14 and IC16A select the voltage to be measured. IC15 and IC16C drive the annunciators by connecting to ANN to turn it on and connecting to BP1 to turn it off.

Auto-ranging of the frequency counter occurs at 1999 going up and 180 coming down. If the dial is set to between 1800 and 1999 and the frequency multiplier is then changed or the display select is cycled through, it is possible that one digit of resolution may be lost because of the counter auto-ranging down. To overcome this R25 and C72 delays the counter input, forcing it to always auto-range up.

Some of IC1s inputs are dual purpose and are listed below:

pin 19 - range/freq. In frequency mode this is the counter input. In voltage mode, when pulled high, it divides the measured voltage by 10 (symmetry). When open the measured voltage is displayed. This pin has an internal 5 µA pulldown to DGND.

pin 24 - freq/volts. When pulled high frequency counting is selected. When open the A to D is selected. This pin has an internal 5 µA pulldown to DGND.

pins 20 and 21 are decoded by the IC only in the voltage mode, to place the decimal point.

SECTION 5 CALIBRATION

5.1 FACTORY REPAIR

Wavetek maintains a factory repair department for those customers not possessing the necessary personnel or test equipment to maintain the instrument. If an instrument is returned to the factory for calibration or repair, a detailed description of the specific problem should be attached to minimize the turnaround time.

5.2 REQUIRED TEST EQUIPMENT

The test equipment required to perform the calibration procedure is listed in table 5-1.

Table 5-1. List of Test Equipment

Equipment	Specifications
Multimeter	Fluke 8060A or equiv.
Oscilloscope	≥100 MHz
Distortion Analyzer	HP 334A or equiv.
Coaxial cable	BNC, RG58U
Probe	X10, 10 MΩ
50Ω Termination	0.1%, 2W
Test Lead	dual mini-hook to banana plug
Jumper	dual mini-hook
Screwdriver	Pozidrive

5.3 CALIBRATION

If the instrument is returned for scheduled maintenance, and there is no failure report from the user, first verify that the unit is fully operational (paragraph 2.3.1) and then perform the Alignment Procedure located in this Section.

The alignment procedure requires that the model 19's bottom cover be removed for access to adjustments. To disassemble the case, proceed as follows:

1. Invert the instrument and remove the 4 screws next to the rubber feet. Use the Pozidrive screwdriver whenever removing or replacing Model 19 hardware.
2. Lift off the case lower ensuring the front and rear panels stay with the top cover.
3. Reassemble in the reverse order.

WARNING

With the covers removed, low voltage dc power supplies are exposed. Do not be misled by the term "low voltage". Under adverse conditions, potentials as low as 50 volts can cause serious injury or death.

5.3.1 Alignment Procedure

NOTE

The completion of the calibration procedures returns the instrument to correct alignment.

Calibration limits and tolerances are not instrument specifications.

Instrument specifications are given in Section 1 of this Manual.

5.3.1.1 Preparation

With the bottom cover removed per the instructions above, set the instrument right side up on the flat surface where the alignmet is going to take place. Invert the unit only to make an adjustment, where necessary. Otherwise the unit should remain upright to retain internal heating. Allow at least a 30 minute warm-up, full amplitude, ATTENUATOR set to –20 dB to load the output.

5.3.1.2 Connector Termination

When used as test points, the SYNC OUT and FUNC OUT connectors must be terminated with 50Ω.

5.3.1.3 Initial Setup

Prior to starting the alignment procedure, preset the instrument's front panel switches and controls as follows:

Control	Position
FREQUENCY RANGE	2K
DISPLAY SELECT	"kHz"
SYM (f/10)	Off (released)
FREQ VERNIER	≈2 kHz (2.0)
FUNCTION	Sine
AMPLITUDE	Max (cw)
DC OFFSET	Off (center detent)
ATTENUATOR	0 dB (released)
AMPLITUDE MODULATION	OFF
SWEEP RATE (PULL FOR ON)	OFF

5.3.1.4 Step-by-Step Procedure

Make equipment interconnections as described in the steps. Figure 5-1 in the back of this section illustrates the adjustment locations on the three boards.

NOTE

The following adjustments are located on the main function generator board.

1. **Power Supplies.** Verify or adjust the Power Supply voltages as indicated:

Test Point	Tolerance	Adjust
TP9	+15V +/-20mV	VR16
TP12	-15V +/-20mV	VR17
TP10	+12V +/-0.5V	
TP13	-12V +/-0.5V	
TP11	+5V +/-0.25V	
TP14	-5V +/-0.3V	

2. **Offset Nulling.** Select: 2k range, frequency vernier to 1.0, sweep off. Make the following adjustments, measure across the two pins in the TP:

IC	TP	Adjust	DVM Reading
4	19	VR32	<40uV
9	20	VR31	<40uV

3. **Triangle Null.** Null the triangle amplifier by shorting its input (TP1) and adjusting VR5 to give <2mV on TP17.

4. **Preamplifier and Output Amplifier DC Offsets.** Ensure the DC offset control is at its center detent. Release all 3 function buttons. With amplitude control to minimum, adjust VR13 for <5mV at the main output.

   Amplitude control to maximum, adjust VR9 for <5mV at the main output.

5. **Waveform Symmetry.** 2k range, vernier at approximately 1.5, squarewave, adjust VR3 for 50% time symmetry using the oscilloscope 10 X-multiplier to increase resolution while switching trigger slope.

   2M range, vernier to approximately .002 to give 2 kHz to 3 kHz, adjust VR4 for 50% time symmetry.

6. **Frequency Calibration.** The instrument makes direct frequency measurement on the 2k to 2M ranges and the accuracy of +/-1 digit is determined by XTL1. Switch to the 200 Hz range, vernier to approximately 1.8, adjust VR6 for the same display reading as the external counter.

   Dial to minimum (ccw), 200k range, adjust VR26 for 170Hz to 190Hz

7. **Sinewave Distortion.** Select sinewave, 2k range, 1 kHz. Adjust VR7 and VR27 for minimum distortion.

NOTE

The following adjustments are located on the Amplitude Modulator Board.

8. **AM.** 200k range, approximately 100kHz, sinewave, modulation gain to minimum, amplitude to maximum (10V pk-pk, 50Ω). Select AM, check output drops to half (5V pk-pk, 50Ω) adjusted by VR18.

   Release all 3 function buttons and set modulation gain to maximum, increase the oscilloscope gain and adjust VR19 for minimum output of the 400 Hz modulation source.

   Set modulation gain to minimum. Adjust VR28 for 0V +/-50mV output.

9. **Meter Calibration.** Calibration of the frequency meter was covered in 6 above.

   Display select to amplitude, 2k range, squarewave, adjust the amplitude control to give 16V pk-pk (8V pk-pk into 50Ω) then adjust VR23 for 1600 on the display.

   Display select to offset, release all 3 function buttons, amplitude to minimum, offset control fully clockwise, connect a multimeter to the main output, adjust VR15 so that both meters read the same.

   Offset control at center detent, adjust VR14 so both meters read the same.

   Offset control fully clockwise, readjust VR15 so that both meters read the same within 1%.

NOTE

The following adjustment is located on the Sweep Board.

10. **Sweep.** Sweep to on, stop control to maximum, 2M range, vernier to minimum (.002), hold in set start and adjust VR29 for 1.7 kHz to 1.9 kHz. Pull for LOG, hold in set start and adjust VR24 for 1.7 kHz to 1.9 kHz.

    200k range, hold in set stop and adjust VR30 for 200 kHz.

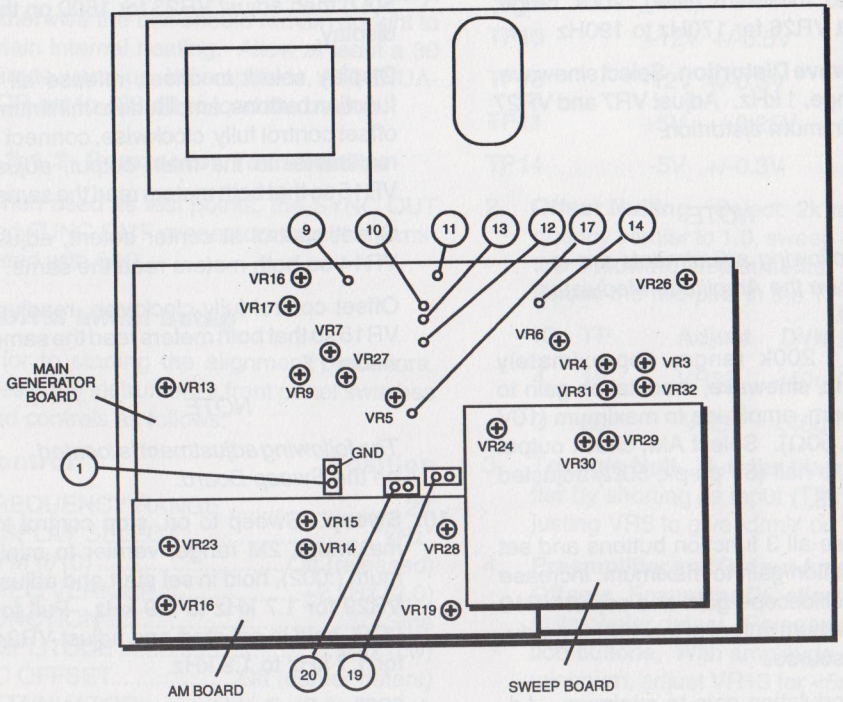

TP9 CATHODE OF D36

TP10 ANODE OF D37

TP11 PIN 3 OF IC24

TP13 CATHODE OF D39

Figure 5-1. Model 19 Alignment Locations.

SECTION 6 TROUBLESHOOTING

6.1 FACTORY REPAIR

Wavetek maintains a factory repair department for those customers not possessing the necessary personnel or test equipment to maintain the instrument. If an instrument is returned to the factory for calibration or repair, a detailed description of the specific problem should be attached to minimize turnaround time.

6.2 BEFORE YOU START

Since no troubleshooting guide can possibly cover all the potential problems, the aim of this guide is to give a methodology which, if applied consistently, will lead to the problem area. Therefore, it is necessary to familiarize yourself with the instrument by reviewing the functional description and the detailed circuit description (Section 4) in conjunction with the schematic (Section 7). Successful troubleshooting depends upon understanding the circuit operation within each functional block as well as the block relationships.

WARNING

With the covers removed, dangerous voltage points may be exposed. Contact with any of these points could cause serious injury or death.

The intent of this section is to provide the information required to return this instrument to proper operation. Information is divided into two parts. Part one contains the overall instrument fault isolation table (table 6-1), which is useful in isolating defective circuit blocks within the instrument. The circuit blocks in the table correspond to figure 4-1. Also, each circuit guide references related schematics, circuit descriptions, and calibration procedures. Part two consists of troubleshooting paragraphs and tables, one for each block shown in table 6-1, that provides settings and measurements for troubleshooting an individual block.

Before beginning the troubleshooting process, verify that the instrument's controls are set correctly. Table 6-2 gives examples of possible symptoms that can be the result of a setup error. For more information about the instrument controls and operation, refer to Section 3 of this manual.

Inspect the instrument's components, wiring and circuit boards for damage. Finally, ensure that the ac fuse is intact and the internal dc power supplies are good following the procedures in paragraph 6.3.1.

6.2.1 Isolating a Problem

To successfully troubleshoot this instrument, the symptom must first be identified, the faulty block isolated, the block analyzed, and the defective component located and replaced.

To identify the symptom, use all of the front panel controls and connectors. For example, if the instrument operates normally when set up according to the "standard" front panel controls setup (paragraph 6.2.2), what can the different control setup that produces

the symptom tell you about which circuit block is being used differently?

Once the symptom is identified, use figure 4-1 to isolate the circuit block. After the block is isolated, refer to the appropriate functional circuit guide (table 6-1).

The circuit guides provide some but not necessarily all of the possible failure modes for a particular circuit. Where applicable, an instrument setup is given to help isolate the problem for a particular failure mode. Paragraph 6.4 gives component troubleshooting information.

NOTE

A failed or marginal power supply can often cause a number of symptoms. It is always a good policy to perform the power supply checks in paragraph 6.3.1 before attempting any other fault isolation or troubleshooting procedures.

Table 6-1. Functional Circuit Guides

Circuit Guide	Paragraph: Circuit Description (4.X) Calibration (5.3.1.3) Troubleshooting (6.X)			Troubleshooting Tables	Schematic Location
Power Supply Mains	4.2.1		6.3.1		A4
Regulated Power Supplies	4.2.2	step 1	6.3.1		A3
Current Sources	4.2.3	step 2,5,6	6.3.2	6-3, 6-4	D8, D6-D5
Ranges/Triangle Amplifier	4.2.4	step 3	6.3.3	6-5	D4-3
Comparator/Aux Out	4.2.5		6.3.4		D3-D2
Sine/Square Shaping	4.2.6	step 7	6.3.5		C6-C5
Preamplifier	4.2.7	step 4	6.3.6		C4
Output Amplifier/DC Offset	4.2.8	step 4	6.3.7		C3-C2
Amplitude Modulator	4.2.9	step 8	6.3.8		B5-B3
Sweep/Ramp Generator	4.2.10	step 10	6.3.9		C8-C7
Log Converter	4.2.10	step 10	6.3.10		D7-D6
Digital Display	4.2.11	step 9	6.3.11		A8-A5

Table 6-2. Instrument Setup Common Errors

Symptom	Possible Setup Error
Display blank, no output.	Rear panel power switch not on.
	Fuse blown or incorrect voltage selection.
	Damaged power cord, or not fully seated.
No output at MAIN OUT.	All three FUNCTION buttons released.
	FREQUENCY set very low.
	AMPLITUDE control fully ccw and/or ATTENUATION button depressed.
	Defective cable or termination, scope input grounded.

Table 6-2. Instrument Setup Common Errors (Continued)

Symptom	Possible Setup Error
MAIN OUT waveform clipped.	Combination of AMPLITUDE and DC OFFSET controls settings are overdriving the output amplifier.
	External AM input at AM/SWEEP IN with large dc component overdriving the amplitude modulator.
Poor waveform.	Using bottom decades of frequency range. Switch range to select the same frequency using the top decade of a range.
Waveform "jumping" or "shaking".	Internal AM is on. Release AMPLITUDE MODULATION ON/OFF button.
	External SWEEP/FM is on. Remove AM/SWEEP IN input or depress AMPLITUDE MODULATION EXT/INT button.
	Internal sweep is on. Push in RATE control.
AUX OUT missing.	FREQUENCY set very low.
SWEEP OUT missing.	RATE control not pulled out.
	STOP or RATE control set fully ccw.
No external FM/sweep.	AM/SWEEP IN input disconnected. Release both the AMPLITUDE MODULATION EXT/INT and ON/OFF buttons.
Amplitude is 1/2 displayed value.	Normal operation. Display shows Vp-p open circuit; 50Ω termination reduces delivered output by half.
Amplitude 1/2 what it should be.	Internal or external AM is on with AM gain set low. Release both the AMPLITUDE MODULATION EXT/INT and ON/OFF buttons.
Frequency display is ".OL"	Counter over-ranged. Rotate FREQUENCY (Start) control ccw slightly for ≤ 2000 counts in the display.
Vp-p display is ".OL"	Counter over-ranged. Rotate AMPLITUDE control ccw slightly for ≤ 2000 counts in the display.
Vdc display is ".OL"	Counter over-ranged. Rotate DC OFFSET control ccw slightly for ≤ 2000 counts in the display.
"SET STOP" doesn't set.	RATE control not pulled out.
Sweep "hesitates" or "backs up".	"SET STOP" is not set correctly; above normal range limits.
Doesn't sweep.	RATE control not pulled out.
	STOP or RATE control fully ccw.
Waveshapes are "skewed".	SYM button is depressed.
	FREQUENCY set to very bottom of range.

6.2.2 Standard Front Panel Settings

When encountering a problem, it is advisable to return as many of the front panel controls as possible to their initial settings and still retain the problem. The troubleshooting paragraphs and tables in this section generally begin at these initial settings and specify all subsequent setups. Preset the front panel controls as follows:

Control	Position
FREQUENCY (START)	2.0
SWEEP STOP	linear (push in)
SWEEP RATE	off (push in)
Display Select	kHz
SYM	off (released)
FREQUENCY RANGE Hz	2k
FUNCTION	sine wave
ATTENUATOR	off (released)
AMPLITUDE	max (cw)
DC OFFSET	off (center detent)
AMPLITUDE MODULATION	off*

* AM and the AM/SWEEP IN input are completely disabled when both the EXT/INT and ON/OFF buttons in the AMPLITUDE MODULATION functional grouping are released.

All other control setting are N/A.

6.3 TROUBLESHOOTING GUIDES

Refer to table 6-1 for circuit guide information. This will provide circuit the description paragraph, possible alignment step(s), and troubleshooting paragraph/table to be used to correct a problem related to the circuit block.

6.3.1 Mains and Power Supply

The power supply should be verified before starting any other troubleshooting procedure. First verify that proper voltage selection and fuse value (paragraph 2.2.1) for your location. Note that Japan units use a 100 VAC transformer tap in place of the usual 115 VAC selector position. Ensure that the fuse has not been blown and that the power cord has not been modified or damaged, and that it is fully seated in the power receptacle. Ensure rear panel mounted power switch is on. Then, if the unit is still malfunctioning, proceed with the following:

1) With the power cord removed, loosen the four phillips pan-head screws in the bottom cover in the recesses next to the feet. Pull off the bottom cover and bail assembly. Set the unit in the inverted position on the benchtop and reconnect the power cord.

2) Locate the power transformer and the three secondary wires leading to connector PJ7 in the left-rear corner of the main function generator printed circuit board. Locate full-wave bridge D32-D35. Connect oscilloscope probe ground lead to a front panel BNC solder lug. Connect probe to cathode (banded end) of either D32 or D35. Scope should indicate approximately +23 Vdc (will vary ±10% with line voltage) unregulated. Allowable line ripple is approximately 2 Vp-p. Move probe to anode of D33 or D34. Minus unregulated voltage should be mirror image of the plus unreg. If these voltages are normal, the mains connections and the transformer primary and secondary circuits are good.

3) Move probe to TP9 (cathode D36, behind the heatsink) and verify +15 Vdc, to TP12 (anode D39, in front of the heatsink) and verify –15 Vdc, TP11 (IC25 pin 14, HEF4070, right of the heatsink) and verify +5Vdc, to TP10 (D37 anode, just to right of heatsink) and verify +12 Vdc, and finally to TP13 (cathode of D39) and verify –15 Vdc. Each regulated voltage should appear clean and ripple-free on the scope. If voltage accuracy is in question, retest at each test point using a DVM and verify accuracy of readings per step 1 of the alignment procedure.

NOTE

If VR16 or VR17 is adjusted to bring the regulated supplies into alignment specification, the entire alignment procedure must be performed before the unit may be returned to service.

Adjust power supply voltage accuracy if necessary.

4) If the desired results can not be obtained in the above steps, replace either IC22, IC23, IC24, D37 or D39 or associated circuitry as appropriate. However, if a given supply is low in value, note that the supply itself may not be a fault, but other circuitry connected to that supply may be loading it down (pulling more current from the supply than it can deliver). This can be isolated by lifting circuit nodes, one at a time, until the supply returns to normal. Usually, first looking for overheating parts will facilitate this tedious process.

6.3.2 Current Sources

The current sources control instantaneous waveform frequency and time symmetry within a selected range. If unsure whether or not this circuit block is faulty, proceed as follows to test it:

1) Set up the instrument controls for standard settings per paragraph 6.2.2 and prepare the unit per 6.3.1, step 1.

2) Connect the MAIN OUT to the oscilloscope with 50Ω termination. Set scope for 2 V/div vertical and 0.1 ms/div horizontal. Two sine wave cycles should be displayed. If not, skip to step 5.

3) Rotate FREQUENCY (Start) control ccw and back to 2.0. Verify waveform frequency smoothly follows control setting and that the waveform time symmetry does not skew excessively near the bottom of the range. Set the control back to 2.0

4) Set the scope horizontal to 1 ms/div and press the SYM button. Rotate the SYMMETRY control back and forth between fully ccw and cw. Observe two waveform cycles with continuous control of time symmetry from approximately 1:10 to 10:1. Return to standard setup.

NOTE

If the previous two steps tested successfully, the Current Sources (as well as the Power supplies, 2k range switching, Triangle Amplifier, Comparator, Sine Shaper, Preamplifier and Output Amplifier circuit blocks) are operational. Look for another starting point.

5) The absence of a normal waveform in step 2 could be due to any number of faulty circuits. Test the Current Sources by continuing this procedure. Start by locating the three wires leading from the FREQUENCY (Start) control to the main generator printed circuit board. Also locate IC2, LM324 nearby.

6) Test the various current source voltages at the points indicated in Table 6-3. Use a X10 oscilloscope probe. Look for a smooth variation of voltage between the two levels indicated as the FREQUENCY (Start) control is varied between 2.0 and .002. Return control cw.

7) Test the various current source voltages at the points indicated in Table 6-4. Use a X10 oscilloscope probe. Push the SYM button in. Look for a smooth variation of voltage between to two levels indicated as the SYMMETRY control is varied between ccw and cw.

8) Troubleshoot any bad readings as necessary. When current sources are operational, return to standard setup.

Table 6-3. Current Sources Troubleshooting.

TEST POINT	VOLTAGE (2.0)	VOLTAGE (.002)	CIRCUITRY
YELLOW WIRE	+14V	0V	VR1, FREQ
IC2 PIN 13	0V	0V	IC2
TP16 (Q1, EMITTER)	-4V	0V	IC2, Q1
TP19 (BOTH PINS)	+7V	+12 V	IC2, Q3, IC4, Q5
TP20 (BOTH PINS)	–7V	–12 V	IC2, Q16, IC9, Q17

Table 6-4. Current Sources/Symmetry Troubleshooting.

TEST POINT	VOLTAGE (CCW)	VOLTAGE (CW)	CIRCUITRY
TP19 (BOTH PINS)	+11.5V	+9 V	VR2, SYM
TP20 (BOTH PINS)	–9V	–11.5 V	VR2, SYM

6.3.3 Ranges/Triangle Amplifier

Frequency ranges should be checked if the unit operates on at least one range, but not all. The Triangle Amplifier should be checked if the unit has no waveform output or if there is waveform clipping or distortion.

Verify frequency ranging by setting the unit up with standard settings (paragraph 6.2.2) and connect AUX OUT to a counter/timer. Press the FREQUENCY RANGE Hz buttons in turn, until any bad ranges have been identified. Refer to Table 6-5 for troubleshooting.

The triangle amplifier is verified as follows:

1) Set unit to standard control settings (paragraph 6.2.2).

2) If the generator is *not* producing a waveform, check the junction of D9 and D10 (just left of TP20) for either plus or minus 2 Vdc. If incorrect, there is a problem in the Comparator, IC5 and Q6 circuits.

3) Note the voltage or signal at the front pin of TP1 (2 pin connector left of TP20 and just under the edge of the AM board). Be sure to use oscilloscope and X10 probe!

Table 6-5. Frequency Ranges Troubleshooting.

FREQUENCY RANGE	EXPECTED FREQUENCY	CIRCUITRY
2	2 HZ	SW1, R50, R59, C11
20	20 HZ	SW2, R51, R61, C11
200	200 HZ	SW3, C11
2K	2 KHZ	SW4, C10
20 K	20 KHZ	SW5, C9
200K	200 KHZ	SW6, C8
2 M	2 MHZ	C6, C7, C16 to 19

4) Compare the signal at TP1 to that at TP17 (easiest to locate at IC12, pin 6, just in front of the power supply heatsink).

5) The signals at TP1 and TP17 should be identical, both dc value and signal. The only exception is when the generator is not running and the TP1 dc signal is greater than the saturation limits of the Triangle Amplifier. If this is the case, check diodes D9 through D12 and Q7.

6) If TP17 differs from TP1, troubleshoot the Q7, Q8, Q9 circuitry and verify the setting of VR5.

6.3.4 Comparator

If the generator is *not* producing a waveform, check the junction of D9 and D10 (just left of TP20) for either plus or minus 2 Vdc. If incorrect, there is a failure in the Comparator, IC5 and Q6 circuits. The purpose of Q6 is to level shift from TTL to ±2V. IC5 pins 4 and 9 should be opposite TTL levels. IC5 pin 2 should be either 0V or +0.7V or D20 is bad. IC5 pin 12 should be either 0V or –0.7V or D21 is bad. Both inputs should not be 0V, and the polarity of the TRI signal at IC12 pin 6 should be the same as the IC5 input that is not 0V. C71 and C77 prevent multiple edges, and C16 through C19 are to keep triangle amplitude flat at higher frequencies.

If the generator is running, but the square function is missing, check the Q10, the Square Shaper, and SW10 circuitry.

If the generator is running, but the AUX OUT is missing, check IC6.

If the generator is running, but the frequency counter display is not functioning on the upper 4 ranges, check IC25.

6.3.5 Sine/Square Shaping

Before attempting to troubleshoot the shaping networks, make sure the generator loop is producing the basic triangle and square waveforms. Set the unit to its standard settings (paragraph 6.2.2) and verify a precise ±1V, 2 kHz triangle at IC12 pin6. Then press the square FUNCTION button and check the cathode of D23 (just to the right of IC12) for an approximate ±1V square. If these two waveforms and the triangle output waveform is normal, and the sine or square output waveform is defective, proceed with the following steps. If the triangle output waveform is also defective, proceed to the Preamplifier and then the Output Amplifier troubleshooting.

1) If the sine wave is normal and the square is bad, then skip to step 3.

2) With the unit in its standard setup (verify sine function selected), check the sine wave output. If the waveform is only moderately distorted, try the VR7 and VR27 adjustments. Otherwise, the IC25 circuitry (located in front of the power supply heat sink) or SW9-A is faulty. When the sine has been repaired, go to the next step to troubleshoot a faulty square.

3) Select the square function. If the other functions are good, and the ±1V square at D23 is good, then the Square Shaper circuit (D13 to D16, SW10-B) or SW10-A is faulty. The shaper's diode bridge can be located by finding the Output Amplifier's output transistors Q26/Q28 with the heatsinks. The diodes are in front of Q26, just under the edge of the AM board. The shaper acts to limit (or clamp) the D23 signal to ±0.5V, improving waveform quality and amplitude stability.

6.3.6 Preamplifier

With the unit in its standard setup (paragraph 6.2.2), a good triangle signal at IC25 pin 6, and when triangle function is selected the MAIN OUT triangle is bad, then the Preamplifier should be checked, as follows:

1) Locate the Q19 through Q22 circuitry by looking to the right of Q26, the Output Amplifier output transistor with a heatsink.

2) Also locate the AMPLITUDE control on the AM board. If the Preamplifier is bad, the suspected circuitry is Q19 to Q22 on the main board, the AMPLITUDE control on the AM board, the function selection switches, or the interconnect ribbon cable PJ5/PJ6 between the boards.

3) Test the Preamplifier output by locating VR15 at the rear edge of the AM board. Just to the right of VR15 is R108. The Preamplifier ±1V triangle output can be seen at the front end of R108. If faulty, troubleshoot the circuitry indicated in step 2. The AMPLITUDE control can be tested by probing the center lug at the control body and varying the AMPLITUDE control. The triangle waveform amplitude should vary smoothly with control rotation and be ±1V when fully cw.

4) If the triangle output is bad, and the Preamplfier tests good, proceed to the next paragraph.

6.3.7 Output Amplifier/DC Offset

If the triangle waveform is good up through the Preamplifier and the MAIN OUT triangle is bad, the problem is in the Output Amplifier. Proceed as follows:

1) Locate the Output Amplifier under the ribbon cable PJ5/PJ6 connecting the AM board down to the main board. Q26 and Q28, the final output stage can be easily seen with their heatsinks.

2) Just next to PJ5 on the main board, locate input resistor R131. The left side of R131 should have the signal from the wiper of the AMPLITUDE control.

3) Ensure that the DC OFFSET control is in its center detent. The left side of R131, the right side of R131, and the left side of R133 should all have the same signal, a ±1V triangle if triangle is selected and AMPLITUDE is cw. Verify that the right side of R133, the offset input, is near 0Vdc.

4) If the dc offset input is correct, but the three triangle signals are incorrect, the output amplifier is faulty. Troubleshoot the Q23 to Q28 circuitry. One way to proceed is to select "dc" function by releasing all three FUNCTION buttons. With 0Vdc input (R133), the output should be able to be set to 0Vdc using VR13. Under these conditions there should be 0Vdc at the bases of Q23 and Q24, +13 Vdc at the base of Q25, –13 Vdc at the base of Q27, +0.7 Vdc at the base of Q26, and –0.7 Vdc at the base of Q28.

5) When 0Vdc can be obtained in the previous step, test dc offset. Check the right side of R133 for a ±10 Vdc swing as the DC OFFSET control is adjusted from ccw to cw. Then check the MAIN OUT for ±10 Vdc swing open circuit (±5 Vdc swing with 50Ω termination). Return the DC OFFSET control to its center detent and reselect the triangle.

6) If the previous steps are good, the only remaining problem with the Output Amplifier may be ac bandwidth. Verify a normal 2 kHz, 10 Vp-p triangle when the MAIN OUT is connected to the scope with a 50Ω termination. Select the square function and verify normal waveform (if not, first troubleshoot the Square Shaper).

7) Select 2M FREQUENCY RANGE Hz and observe the 2 MHz square on the scope. Check for normal waveform appearance and rise/fall transition times under 100 ns (10-90% transitions less than 1 division at 0.1 µs/div). If bad, first try replacing the small value capacitors in the Square Shaper, Preamplifier, and Output Amplifier circuits.

6.3.8 Amplitude Modulator

The Amplitude Modulator circuit is not being used when in standard setup (paragraph 6.2.2). Before troubleshooting the AM circuits, first verify that the unit operates normally in standard configuration (controls set according to paragraph 6.2.2). Then proceed as follows:

1) Modify the control settings by pressing the 200k FREQUENCY RANGE Hz and AMPLITUDE MODULATION ON/OFF buttons. Ensure the INT/EXT button is released. This should produce internal AM. Vary the AM gain control from ccw to "max". This should result in 0% AM (carrier at 1/2 normal amplitude level) to something over 100% AM (clipping will occur when over 100%). Note what actually occurs and go on to the next step.

2) Press the INT/EXT button. AM should be 0% with a carrier 1/2 normal amplitude. Apply an external 1 kHz sine wave with 4 Vp-p amplitude and no dc offset. This should produce external AM. Vary the AM gain control from ccw to "max". This should result in 0% AM to something over 100% AM (clipping will occur when over 100%). Note what actually occurs and go on to the next step.

3) If step 1 is bad and step 2 is good, the problem is in the internal 400 Hz oscillator. If both steps 1 and 2 are bad, the problem is in the AM modulator.

4) Remove the external input and release the INT/EXT button. Check the internal 400 Hz oscillator for 1 Vp-p at the wiper tab of the AM gain control (when fully cw) using oscilloscope X10 probe. If bad or missing, troubleshoot the oscillator. IC18-B is a Wien Bridge, using C48/R100 and R101/C49 as the frequency selecting network. LP1 is a nonlinear resistive network which stabilizes the amplitude of oscillation at approximately ±11 V at IC18 pin 7. SW14 enables the oscillator and SW15 selects between internal and external AM input.

5) With the ON/OFF button released, IC19 pin 1 should be approximately –3.5 Vdc. With the button pressed, the dc level should have a ±1V, 400 Hz sine wave superimposed on it. If not, check the IC18-A circuitry.

6) Check IC19 pin 8 for an approximate 25 mVp-p, 200 kHz sine. Use reduced scope bandwidth and a short probe ground to see this small signal.

7) Set the scope for ac input coupling and check IC19 pins 6 and 12 for an approximate 200 mVp-p AM signal. Check same pins for nearly +15 Vdc. If wrong or missing, the IC19 circuitry is probably at fault.

8) If previous signal is good, but AM output is still bad, the differential amplifier consisting of Q29 through Q32 is probably bad. The amplifier output can most conveniently be tested by looking at the wiper tab of the AMPLITUDE control.

6.3.9 Sweep/Ramp Generator

The Sweep Generator circuit is not being used when in standard setup (paragraph 6.2.2). Before troubleshooting the sweep circuits, first verify that the unit operates normally in standard configuration (controls set according to paragraph 6.2.2). Then proceed as follows:

1) Set up the sweep generator controls for troubleshooting by pulling the RATE control out and setting it fully cw, pushing the STOP control in and setting it fully cw, and setting the FREQUENCY (Start) control to .002.

2) Check the SWEEP OUT for a 0V to approximately +6V triangle with an approximate 20 ms period. If normal, the sweep generator is running; skip to step 5 to verify sweep operability.

3) If the sweep generator is not running normally, verify current source operation by monitoring IC7 (sweep board) pin2 with X10 probe while rotating RATE control. Range should be from 0Vdc (ccw) to approximately –11 Vdc (cw). If

bad check IC7 and Q18 circuitry. Leave control fully cw.

4) IC8 pin 3 should be either plus or minus a diode drop, or a ±0.7 V square when generator is running. Polarity is determined by buffered sweep voltage at IC7 pin 7, window comparator IC10 A and B, and generator state "memory" circuit consisting of Q13, Q14, Q15, flip-flop IC11-A, and D5/D6 network. Check that IC7 pins 5 and 7 agree. Window thresholds are set at 0V and approximately +4V. The polarity of the signal at IC8 pin 3 determines the direction that the timing capacitor C54 is being charged by IC8, and the IC7 current source determines the charging current. If the charge on the capacitor is outside the range of 0V to +4V, the polarity of the IC8 pin 3 input should be what's needed to return it within the correct range. If the polarity is wrong, troubleshoot the window comparator and memory circuitry; if it's right troubleshoot the IC8 oscillator circuit. If the ramp generator is running, but there is no signal at the SWEEP OUT, IC10-C is bad.

5) If the SWEEP OUT signal is good, verify that IC10 pin 14 has the ramp signal which varies from 0V (STOP control ccw) to a maximum of 0 to +4V (STOP control cw). Leave the STOP control cw.

6) Verify signal of previous step appears at R28 on the main generator board. This test point can be located by finding where the red wire from the FREQUENCY (Start) control connects to the main generator board. The end of R28 with the "ramp" signal is just forward of the point where the red wire is attached to the board. If the signal is missing, check SW18, SW19, and ribbon cable PJ3/PJ4.

7) If the signal of the previous step is good, the generator should be sweeping.

6.3.10 Log Converter

Troubleshoot the Log Converter only after verifying that the linear sweep generator of the previous paragraph is operating normally. Start by setting the unit to standard settings according to paragraph 6.2.2). Then proceed as follows:

1) Set up the sweep generator controls for troubleshooting by pulling the RATE control out and setting it fully cw, pulling the STOP control out (Log) and setting it fully cw, and setting the FREQUENCY (Start) control to .002.

2) On the sweep generator board, check IC3 pin 7 for an exponential up/down sweep signal, approximate 20 ms period, starting at 0V and ending at approximately +4V.

3) If the signal of the previous step is bad, the IC3/IC13 circuitry is faulty. When repaired, reset the alignment of VR24 and VR30.

6.3.11 Digital Display

Before attempting to troubleshoot the display make sure that the power supplies (paragraph 6.3.1) are correct, and that the unit is fully operational in other respects.

1) Set the unit to standard settings per paragraph 6.2.2.

2) Verify a 2 kHz TTL signal at AUX OUT.

3) Locate IC14, IC15, and IC16 under the sweep board. Check IC16 pin 1 for a train of narrow +1V to +4V pulses occurring every 0.25 ms (generator frequency X2). If missing, check IC26 circuitry.

NOTE

The display logic circuitry is typically at a very high impedance. Use a X10 scope probe, and if the signals suddenly become incorrect, try cycling power before attempting to troubleshoot the effected circuits.

4) Check IC14 pin 1 for a voltage that varies from –0.1 Vdc with DC OFFSET ccw to +0.1 Vdc with DC OFFSET cw. If wrong, check IC18-C circuitry.

5) Check IC14 pin 3 for a voltage that varies from 0Vdc with AMPLITUDE ccw to +0.2 Vdc with AMPLITUDE cw. If wrong, check VR11-B network.

6) Check IC16 pin 13 for a voltage that varies from 0 Vdc with FREQUENCY (Start) ccw to –0.2 Vdc with FREQUENCY (Start) cw. If wrong, check VR6 network.

7) Set FREQUENCY (Start) cw. Monitor IC16 pin 14 while repeatedly pressing the Display Select key. The voltage should cycle through 0Vdc for two presses and then –0.2 Vdc for one press. If incorrect, check Display Select button, IC 20/21, and IC16 circuits.

8) Set AMPLITUDE and DC OFFSET both cw and monitor IC 14 pin 4 while repeatedly pressing the Display Select key. The voltage should cycle through 0Vdc for one press, +0.2 Vdc for one press, and then +0.1 Vdc for one press. If incorrect, check IC14 circuit.

9) Monitor IC16 pin 15. The pulse train described in step 3 should appear every third press of the Display Select key. Wait for a few seconds between presses. With the pulse train visible at pin 15, press each of the FREQUENCY RANGE Hz buttons, waiting a few seconds between presses. The pulse train should be present on only the top four ranges. Select any lower range where the pulse train is absent. Verify that pin 15 is a TTL low when SYM is released and a TTL high when SYM is depressed. Any failures in this area may be due to a range switch, IC17, or Q33.

10) Locate D25, D26, D27, and D28 (display decimal point logic) at the right, rear of the generator board between IC17 and IC20. Return all settings to standard setup per paragraph 6.2.2. Monitor the cathode of D25 while pressing the Display Select key. Note that it is high every third press. Stop with the signal high. Note that it goes low if the 20 Hz range key is pressed.

11) Monitor the cathode of any one of the other three diodes. This line should now be high. Note that when the 200 Hz range button is pressed, this signal goes low; and when the 2k range key is pressed it returns high.

12) Press the Display select once. The D25 line should be low, and the D26-28 line should be high. Press once more and get the same result. A third press returns both lines high.

13) Monitor the "Hz" segment line at IC16 pin 4. This should be a square wave every third press of Display Select, and a tri-level signal for the other two presses. Leave it at the square (Hz on) position. Monitor the "K" segment line at IC15 pin 14. It should be a square wave for the upper four ranges and tri-level for the lower three. Monitor "Vp-p" segment line at IC15 pin 15 while pressing the Display select. Then monitor the "DC" segment at IC15 pin 4. Both should have the square wave for one press and the tri-level for two press sequence as before. A problem with the segment lines could be IC15 or IC16 on the generator board or IC1 on the display board.

14) This completes the discrete tests of the display electronics that can be accomplished by looking at generator board circuits. Verify that the ribbon connector PJ1/PJ2 between the generator and display boards is connected properly. With the exception of the 80 kHz crystal, the display board components are not readily accessible for troubleshooting and should be replaced as a unit. The

crystal can be checked by probing the two leads. One should be a dc voltage at the TTL threshold and the other an approximate 3 Vp-p, 80 kHz sine wave around the TTL threshold.

6.4 TROUBLESHOOTING INDIVIDUAL COMPONENTS

6.4.1 Transistor

1. A transistor is defective if more than 1 Vdc is measured across its base emitter junction in the forward direction.
2. A transistor, when used as a switch, may have a few volts reverse bias voltage across the base emitter junction.
3. If the collector and emitter voltages are the same, but the base emitter voltage is less than 500 mV forward voltage or reverse biased, the transistor is defective.
4. In a transistor differential pair (common emitter stages), either their base voltages are the same in normal operating condition, or the one with less forward voltage across its base emitter junction should be off (no collector current); otherwise one of the transistors is defective.

6.4.2 Diode

A diode (except a zener) is defective if there is greater than 1 Vdc (typically 0.7 Vdc) forward voltage across it.

6.4.3 Operational Amplifier

1. Generally the " + " and " - " inputs of an operational amplifier will have less than 15 mV voltage difference when operating under normal conditions.
2. When the output of the amplifier is connected to the " - " input (voltage follower connection), the output should be the same voltage as the " + " input voltage; otherwise, the operational amplifier is defective.
3. If the output voltage stays at maximum positive, the " + " input voltage should be more positive than "-" input voltage, or vice versa; otherwise, the operational amplifier is defective.

6.4.4 Field Effect Transistor (FET)

No measurable gate current should be drawn by the gate of an FET transistor. If so, the transistor is defective. Gate to source voltage is always reverse biased under a normal operating condition; e.g., the source voltage is more positive than the gate voltage for 2N5485 and the source voltage is more negative than gate voltage for a 2N5462. Otherwise, the FET is defective.

6.4.5 Capacitor

1. Shorted capacitors have 0V across their terminals.
2. Open capacitors can be located (but not always) by using a good capacitor connected in parallel with the capacitor under test and observing the resulting effect.
3. Leaky capacitors will often have a decreased voltage across their terminals.

SECTION 7
PARTS AND SCHEMATICS

7.1 DRAWINGS

The following schematics and assembly drawings are in the arrangement shown below.

7.2 ERRATA

Under Wavetek's product improvement program, the latest electronic designs and circuits are incorporated into each Wavetek instrument as quickly as development and testing permit. Because of the time needed to compose and print instruction manuals, it is not always possible to include the most recent changes in the initial printing. Whenever this occurs, errata pages are prepared to summarize the changes made and are inserted inside the shipping carton with this manual. If no such pages exist, the manual is correct as printed.

7.3 ORDERING PARTS

When ordering spare parts, please specify part number, circuit reference, board, serial number of unit and, if applicable, the function performed.

NOTE

An assembly drawing number is not necessarily the assembly part number. However, the assembly parts list number is the assembly part number.

DRAWING	DRAWING NUMBER
Schematic	59120-0509
Parts list	

PARTS LIST, PCB Assy Main, consisting of:

Resistors

Ref	Description	Part No
R1	See Control PCB Assy	
R2	150KF W25 MF	23202-4150
R3	39K0F W25 MF	23202-3390
R4	39K0F W25 MF	23202-3390
R5	5K10F W25 MF	23202-2510
R6	27RJ W25 CF	23185-0270
R7	10KJ W25 CF	23185-3100
R8	10MJ W25 CF	23185-6100
R9	See Control PCB Assy	
R10 to R12	See Sweep PCB Assy	
R13	See Control PCB Assy	
R14 to R16	See Sweep PCB Assy	
R17	27KJ W25 CF	23185-3270
R18 to R23	See Sweep PCB Assy	
R24	10MJ W25 CF	23185-6100
R25	300KJ W25 CF	23187-4300
R26	See Sweep PCB Assy	
R27	See Sweep PCB Assy	
R28	39K0F W25 MF	23202-3390
R29 to R37	See Sweep PCB Assy	
R38	100KJ W25 CF	23185-4100
R39 to R41	620RF W25 MF	23202-1620
R42	715RF W25 MF	23202-1715
R43	10KJ W25 CF	23185-3100
R44	1K43F W25 MF	23202-2143
R45	270KJ W25 CF	23185-427
R46	1K43F W25 MF	23202-2143
R47	620RF W25 MF	23202-1620
R48	715RF W25 MF	23202-1715
R49	1K37F W25 MF	23202-2137
R50	270KD W60 MF	23221-4270
R51	27K0D W60 MF	23221-3270
R52	2K70D W60 MF	23221-2270
R53	12K0F W25 MF	23202-3120
R54	12K0F W25 MF	23202-3120
R55	1K00F W25 MF	23202-2100
R56	1K00F W25 MF	23202-2100
R57	1K65F W25 MF	23202-2165
R58	715RF W25 MF	23202-1715
R59	270KD W60 MF	23221-4270
R60	2K70D W60 MF	23221-2270
R61	27K0D W60 MF	23221-3270
R62	1K5J W25 CF	23185-2150
R63	2K2J W25 CF	23185-2220
R64	470RJ W25 CF	23185-1470
R65	1K5J W25 CF	23185-2150
R66	220RJ W25 CF	23185-1220
R67	680RF W25 MF	23202-1680
R68	130RF W25 MF	23202-1130
R69	130RF W25 MF	23202-1130
R70	680RF W25 MF	23202-1680
R71	220RF W25 MF	23202-1220
R72	16K0F W25 MF	23202-3160
R73	220RF W25 MF	23202-1220
R74	16K0F W25 MF	23202-3160
R75	150RJ W25 CF	23185-1150
R76	100KJ W25 CF	23185-4100
R77	4K7J W25 CF	23185-2470
R78	47RJ W25 CF	23185-0470
R79	22K6F W25 MF	23202-3226
R80	1K10F W25 MF	23202-2110
R81	15KF W25 CF	23202-3150
R82	226RF W25 MF	23202-1226
R83	110RF W25 MF	23202-1110
R84	180RJ W25 CF	23185-1180
R85	13K0F W25 MF	23202-3130
R86	24K9F W25 MF	23202-3249
R87	47RJ W25 CF	23185-0470
R88	15KF W25 CF	23202-3150
R89	See Control PCB Assy	
R90 to R96	See Display PCB Assy	
R97	See Control PCB Assy	
R98	4K7J W25 CF	23185-2470
R99	1K0J W25 CF	23185-2100
R100 to R118	See Control PCB Assy	
R119	150RJ W25 CF	23185-1150
R120	3K6J W25 CF	23187-2360
R121	6K2J W25 CF	23187-2620
R122	47RJ W25 CF	23185-0470
R123	3K3J W25 CF	23185-2330
R124	1K5J W25 CF	23202-2150
R125 to R130	See Control PCB Assy	
R131	470RJ W25 CF	23185-1470
R132	1K2J W25 CF	23185-2120
R133	9K10F W25 MF	23202-2910
R134	1K00F W25 MF	23202-2100
R135	270KJ W25 CF	23185-4270
R136	9K10F W25 MF	23202-2910
R137	2K7J W25 CF	23185-3270
R138	27KJ W25 CF	23185-3270
R139	1K8J W25 CF	23185-2180
R140	150RJ W25 CF	23185-1150
R141	150RJ W25 CF	23185-1150

PARTS LIST, PCB Assy Main, consisting of:

Resistors (continued)

Ref	Description	Part No
R142 to R145	10R0F W60 MF	23206-0100
R146 to R149	200RF W60 MF	23206-1200
R150	41R2F W60 MF	23206-0412
R151	10R2F W25 MF	23202-0102
R152	41R2F W60 MF	23206-0412
R153 to R155	See Control PCB Assy	
R156	2K20F W25 MF	23202-2220
R157	2K20F W25 MF	23202-2220
R158	220RF W25 MF	23202-1220
R159	220RF W25 MF	23202-1220
R160	2K2J W25 CF	23185-2220
R161	2K2J W25 CF	23185-2220
R162	470RJ W25 CF	23185-1470
R163	1K80F W25 MF	23202-2180
R164	47RJ W25 CF	23185-0470
R165	2K20F W25 MF	23202-2220
R166	270KJ W25 CF	23185-4270
R167	47RJ W25 CF	23185-0470
R168	See Control PCB Assy	
R169	See Control PCB Assy	
R170	47RJ W25 CF	23185-0470
R171	100KJ W25 CF	23185-4100
R172	100KJ W25 CF	23185-4100
R173	10KJ W25 CF	23185-3100
R174	15KF W25 CF	23202-3150
R175	10KJ W25 CF	23185-3100
R176	47K0F W25 MF	23202-3470
R177 to R181	See Sweep PCB Assy	
R184	47RJ W25 CF	23185-0470
VR1	See Front Panel Assy	
VR2	See Control PCB Assy	
VR3	100R PS/H CF	23377-1100
VR4	22K PS/H CF	23377-3220
VR5	470R PS/H CF	23377-1470
VR6	470R PS/H CF	23377-1470
VR7	100R PS/H Cermet	23376-9504
VR8	4K7 PS/H CF	23377-2470
VR9	22K PS/H CF	23377-3220
VR10	Not fitted	
VR11	See Control PCB Assy	
VR12	" "	" "
VR13	22K PS/H CF	23377-3220
VR14	See Control PCB Assy	
VR15	" "	" "
VR16	470R PS/H Cermet	23379-1470
VR17	470R PS/H Cermet	23379-1470
VR18	See Control PCB Assy	
VR19	" "	" "
VR20	See Sweep PCB Assy	
VR21	" "	" "
VR22	See Control PCB Assy	
VR23	" "	" "
VR24	See Sweep PCB Assy	
VR25	Not fitted	
VR26	22K PS/H CF	23377-3220
VR27	22K PS/H CF	23377-3220
VR28	See Control PCB Assy	
VR29	See Sweep PCB Assy	
VR30	" "	" "
VR31	10K PS/H CF	23377-3100
VR32	10K PS/H CF	23377-3100

Capacitors

Ref	Description	Part No
C1	100NK 63V P/E	23620-0246
C2	10PC 63V Cer	23427-0328
C3	10PC 63V Cer	23427-0328
C4	100NK 63V P/E	23620-0246
C5	100NK 63V P/E	23620-0246
C6	120PH 160V P/S	23647-0512
C7	56PH 160V P/S	23647-0524
C8	2N0F 160V P/S	23647-0525
C9	22NJ 100V P/E	23620-0248
C10	220NK 63V P/E	23620-0247
C11	2U2K 100V P/E	23620-0257
C12	10NZ 63V Cer	23427-0325
C13	100NK 63V P/E	23620-0246
C14	100NK 63V P/E	23620-0246
C15	10PC 63V Cer	23427-0328
C16	120PC 63V Cer	23427-0342
C17	120PC 63V Cer	23427-0342
C18	3N3F 160V P/S	23646-0007
C19	3N3F 160V P/S	23646-0007
C20	10NZ 63V Cer	23427-0325
C21	10NZ 63V Cer	23427-0325
C22	10NZ 63V Cer	23427-0325
C23	100NK 63V P/E	23620-0246
C24	100NK 63V P/E	23620-0246
C25	2P2C 63V Cer	23427-0524
C26	2P2C 63V Cer	23427-0524
C27	100NK 63V P/E	23620-0246
C28	100NK 63V P/E	23620-0246
C29	100NK 63V P/E	23620-0246
C30	10UM 35V Elec	23557-0647
C31	10UM 35V Elec	23557-0647
C32	1000U 35V Elec	23557-0664
C33	1000U 35V Elec	23557-0664
C34 to C39	10UM 35V Elec	23557-0647
C40 to C47	See Display PCB Assy	
C48 to C54 to C57	See Sweep PCB Assy	

Capacitors (continued)

Ref	Description	Part No
C58	Not fitted	
C59	Not fitted	
C60	See Sweep PCB Assy	
C61	47PG 63V Cer	23427-0329
C62	100NK 63V P/E	23620-0246
C63	See Control PCB Assy	
C64	10NZ 63V Cer	23427-0325
C65	10UM 35V Elec	23557-0647
C66	10NK 100V P/E	23620-9007
C67	10NZ 63V Cer	23427-0325
C68	See Control PCB Assy	
C69	100NK 63V P/E	23620-0246
C70	100NK 63V P/E	23620-0246
C71	10PC 63V Cer	23427-0328
C72	10UM 35V Elec	23557-0647
C73	1NOK 63V Cer	23427-0331
C74	Not fitted	
C75	Not fitted	
C76	18PG 63V Cer	23427-0337
C77	2P2C 63V Cer	23427-0524

Semiconductors

Ref	Description	Part No
D1	1N4148	25021-0901
D2	5V1 Zener	25130-0903
D3 to		
D6	See Sweep PCB Assy	
D7	1N4148	25021-0901
D8	1N4148	25021-0901
D9 to		
D12	1N916	25021-0903
D13 to		
D23	1N4148	25021-0901
D24	See Display PCB Assy	
D25 to		
D28	1N4148	25021-0901
D29	See Control PCB Assy	
D30	1N4148	25021-0901
D31	1N4148	25021-0901
D32 to		
D36	IN4002	25115-0907
D37	3V0 Zener	25130-0911
D38	1N4002	25115-0907
D39	3V0 Zener	25130-0911
D40	See Sweep PCB Assy	
D41	1N4148	25021-0901
Q1	BC559	25341-0214
Q2	BC559	25341-0214
Q3	BC549C	25377-5790
Q4	BC549	25380-0229
Q5	BC559C	25336-5490
Q6	2N3904	25381-0404
Q7	BF245 Matched	25601-0103

Semiconductors (continued)

Ref	Description	Part No
Q8	BF245 Matched	25601-0103
Q9	BC559	25341-0214
Q10	BC549	25380-0229
Q11	Not used	
Q12	Not used	
Q13 to		
Q15	See Sweep PCB Assy	
Q16	BC559C	25336-5590
Q17	BC549C	25377-5490
Q18	See Sweep PCB Assy	
Q19	BC549	25380-0229
Q20	BC549	25380-0229
Q21	2N3904	25381-0404
Q22	2N3904	25381-0404
Q23	2N3904	25381-0404
Q24	2N3904	25381-0404
Q25	2N3906	25341-0218
Q26	2N2219A	25377-0700
Q27	2N3904	25381-0404
Q28	2N2905A	25344-0500
Q29 to		
Q32	See Control PCB Assy	
Q33	BC559	25341-0214
IC1	See Display PCB Assy	
IC2	LM324	27106-0506
IC3	See Sweep PCB Assy	
IC4	LF351	27106-0627
IC5	75107	27254-0008
IC6	4049	27226-0490
IC7	See Sweep PCB Assy	
IC8	" "	" "
IC9	LF351	27106-0627
IC10	See Sweep PCB Assy	
IC11	" "	" "
IC12	CA3046	27164-0503
IC13	See Sweep PCB Assy	
IC14 to		
IC16	4053B	27226-0530
IC17	4081B	27226-0810
IC18	See Control PCB Assy	
IC19	" "	" "
IC20	4013B	27226-0130
IC21	4013B	27226-0130
IC22	LM317-T	27160-0200
IC23	LM337-T	27160-0210
IC24	7805	27160-0009
IC25	HEF4070	27226-0701

Other Parts on Main PCB Assy

Description		Part No
Header 2 Way (TP1,19,20)	3 off	22573-0041
Header 3W Str.156P (PJ7)	0.5 off	25575-0037
Header 10W Straight (PJ3)		22575-0062
Header 14W Straight (PJ5)		22575-0068
Header 16W Straight (PJ2)		
Transistor pad (for Q26,28)	2 off	20661-0801
Heatsink TO5 (for Q26,28)	2 off	20670-0040
Heatsink PCB mounting 50mm high (for IC22,23)		20670-0200
Attachment Parts for IC22,23		
Screw M3 x 10mmL		20234-0011
Washer M3 S/proof		20037-0301
Nut M3		20210-0101
Bush TO220		20611-0003
Insulating Washer TO220		20613-0006
Bead, ferrite (FB)		22040-0901
Res Zero Ohm (LK1,LK5)		Not fitted
Skt DIL 8 Pin2 off		22574-0118
Skt DIL 14 Pin	6 off	22574-0119
Skt DIL 16 Pin		22574-0120
Switchbank 8 Bank (SW1-8)		22225-0710
Switchbank 4 Bank (SW9-12)		22225-0700
PCB - Main		35555-1770

PCB Assy Control, consisting of:

Resistors

Ref	Description	Part No
R1	27RJ W25 CF	23185-0270
R9	18K0F W25 MF	23202-3180
R13	39K0F W25 MF	23202-3390
R89	10KJ W25 CF	23185-3100
R97	3K00F W25 MF	23202-2300
R100	39K0F W25 MF	23202-3390
R101	39K0F W25 MF	23202-3390
R102	680RJ W25 CF	23185-1680
R103	110KJ W25 CF	23185-4110
R104	30KJ W25 CF	23187-3300
R105	43K0F W25 MF	23202-3430
R106	13KJ W25 CF	23187-3130
R107	10KJ W25 CF	23185-3100
R108	6K65F W25 MF	23202-2665
R109	100RF W25 MF	23202-1100
R110	4K02F W25 MF	23202-2402
R111	12K0F W25 MF	23202-3120
R112	30KJ W25 CF	23187-3300
R113	100RF W25 MF	23202-1100
R114	6K80F W25 MF	23202-2680
R115	510RF W25 MF	23202-1510
R116	510RF W25 MF	23202-1510
R117	1K00F W25 MF	23202-2100
R118	2K2J W25 CF	23185-2220
R125	1K8J W25 CF	23185-2180
R126	1K00F W25 MF	23202-2100
R127	7K50F W25 MF	23202-2750
R128	2K00F W25 MF	23202-2200
R129	3K3J W25 CF	23185-2330
R130	1K5J W25 CF	23185-2150
R153	150KF W25 MF	23202-4150
R154	4M7J W25 CF	23185-5470
R155	910RJ W25 CF	23187-1910
R168	56KJ W25 CF	23185-3560
R169	27RJ W25 CF	23185-0270
VR2	Pot 10K Lin	23347-0160
VR11	Pot 1K + 1K - ganged	23347-0520
VR12	Pot 10K Lin - centre detent	23347-0300
VR14	PS/H 22K CF	23377-3220
VR15	PS/H 220R CF	23377-1220
VR18	PS/H 10K CF	23377-3100
VR19	PS/H 22K CF	23377-3220
VR22	Pot 10K Lin	23347-0160
VR23	PS/H 47K CF	23377-3470
VR28	PS/H 470R CF	23377-1470

Capacitors

Ref	Description	Part No
C48	10NK 100V P/E	23620-9007
C49	10NK 100V P/E	23620-9007
C50	100NK 63V P/E	23620-0246
C51	100NK 63V P/E	23620-0246
C52	100NK 63V P/E	23620-0246
C53	2P2C 63V Cer	23427-0524
C63	100NK 63V P/E	23620-0246
C68	10NK 100V P/E	23620-9007

Semiconductors

Ref	Description	Part No
D29	6V8 Zener	25130-9206
Q29	BC559	25341-0214
Q30	BC559	25341-0214
Q31	2N3904	25381-0404
Q32	2N3906	25341-0218
IC18	MC3403P	27106-0518
IC19	MC1496P	27151-0110

Other Parts on Control PCB Assy

Description	Part No
Skt DIL 14 Pin	2 off 22574-0119
Switchbank 2 Bank	
SW14,15	22225-0740
Res Zero Ohm	
(LK7,8,9,11,12) 5 off 23185-0000	
Lamp, filament 14V 14mA	
LP1	28201-0010
PCB - Control	35555-1170

Connector Assy - Control PCB to Main PCB - 43171-1040 consisting of:

Description	Part No
Skt 14 Way IDC	22575-0061
Transition Conn 14 Way	22575-0048
Cable 14 Way flat grey	
3 ins cut from 10148-0007	

PCB Assy Sweep, consisting of:

Resistors

Ref	Description	Part No
R10	180KJ W25 CF	23185-4180
R11	47KJ W25 CF	23185-3470
R12	150RJ W25 CF	23185-1150
R14	Not used	
R15	150RJ W25 CF	23185-1150
R16	180KJ W25 CF	23185-4180
R17	2K2J W25 CF	23185-2220
R18	36K0F W25 MF	23202-3360
Q15	BC549	25380-0229
R19	7K50F W25 MF	23202-2750
R20	15KJ W25 CF	23185-3150
R21	15K0F W25 MF	23202-3150
R22	10KJ W25 CF	23185-3100
R23	10KJ W25 CF	23185-3100
R26	10KJ W25 CF	23185-3100
R27	10KJ W25 CF	23185-3100
R29	10KJ W25 CF	23185-3100
R30	2K2J W25 CF	23185-2220
R31	10K0F W25 MF	23202-3100
R32	33KJ W25 MF	23185-3330
R33	30K0F W24 MF	23202-3300
R34	7K50F W25 MF	23202-2750
R35	2K2J W25 CF	23185-2220
R36	10K7F W25 MF	23202-3107
R37	4K30F W25 MF	23202-2430
R177	4M7J W25 CF	23185-5470
R178	600RF W60 MF	23206-1600
R179	11K0F W25 MF	23202-3110
R180	4K02F W25 MF	23202-2402
TDR1	680RJ Temp Dep	23387-1680
VR20	Pot 500K Log with	
SW18	switch	23349-0100
VR21	Pot 10K Lin with	
SW19	switch	23349-0110
VR24	PS/H 22K CF	23377-3220
VR29	PS/H 22K CF	23377-3220
VR30	PS/H 10K CF	23377-3100

Capacitors

Ref	Description	Part No
C54	1U0K 63V P/E	23620-0256
C55	10PC 63V Cer	23427-0328
C56	10PC 63V Cer	23427-0328
C57	10NZ 63V Cer	23427-0325
C60	100PG 63V Cer	23427-0322

Semiconductors

Ref	Description	Part No
D3 to		
D6	1N4148	25021-0901
D40	1N4148	25021-0901
Q2	BC549	25380-0229
Q13	BC549	25380-0229
Q14	BC549	25380-0229
Q18	BC559	25341-0214
IC3	LM324	27106-0506
IC7	TL072	27106-0606
IC8	CA3080	27106-0500
IC10	LM324	27106-0506
IC11	74LS74	27223-0740
IC13	CA3046	27164-0503

Other Parts on Sweep PCB Assy

Description	Part No
Skt DIL 8 Pin	3 off 22574-0118
Skt DIL 14 Pin	4 off 22574-0119
Switchbank 2 Bank	
SW16,17	22225-0720
PCB - Sweep	35555-1780

Connector Assy - Sweep PCB to Main PCB - 43171-1030 consisting of:

Description	Part No
Skt 10 Way IDC	22575-0104
Transition Conn 10 Way	22575-0049
Cable 10 Way flat grey	
3 ins cut from	10148-0008

PCB Assy - Display, consisting of:

Resistors

Ref	Description	Part No
R90	48K7F W25 MF	23202-4150
R91	1K00F W25 MF	23202-2100
R92	1M0J W25 CF	23185-5100
R93	100KJ W25 CF	23185-4100
R94	470KJ W25 CF	23185-4470
R95	10MJ W25 CF	23185-6100
R96	10MJ W25 CF	23185-6100

Capacitors

Ref	Description	Part No
C40 to C44	100NK 63V P/E	23620-0246
C45	470NK 63V P/E	23620-0244
C46	100NK 63V P/E	23620-0246
C47	1U0K 25V Sol Al	23578-0005

Semiconductors

Ref	Description	Part No
D24	1N4148	25021-0901
IC1	TSC821CPL	27153-0040

Other Parts on Display PCB Assy

Description	Part No
Screw M4 x 10mml	
Xtal 40KHz	28500-0030
Keyswitch SW13	22226-0140
LCD - TR300B	26100-0080
PCB - Display - TG230	35515-1180

Connector Assy - Display PCB to Main PCB - 43171-1020 consisting of:

Description	Part No
Skt 16 Way IDC	22575-0060
Transition Conn 16 Way	22575-0047
Cable 16 Way flat grey 3 ins cut from	10148-0001

Case Parts

Description	Part No
Case Upper UL 94V-0	33536-1810
Case Lower UL 94V-0	33536-1820
Handle UL 94V-0	31336-0260

Case Parts (continued)

Description	Part No
Screw M3 x 40mml (case upper to lower securing)	4 off 20234-0038
Foot	4 off 20662-0510
Screw No 4 x 5/16"L plastite (feet (4), pcb (4)	8 off 20065-0040
Washer M2.5 (feet securing)	4 off 20030-0264
Cable tie	? off 20653-0204
Screw M3 x 5mmL (Display PCB)	3 off 20234-0017
Spacer plastic 1.5"L (sweep pcb)	4 off 20661-9402
Spacer nylon .125"L (sweep pcb)	4 off 20661-0256
Spacer plastic .75"L (control/main pcb)	3 off 20661-0405
Screw No 6 x 3/8"L (spacers)	14 off 20062-9308
Front Panel	33331-1800
Overlay, front panel	33331-1960
Bezel, display	31711-0070
Pushbutton	14 off
Knob 11mm	6 off
Cap for 11mm knob	6 off
Knob 21mm	
Cap for 21mm knob	
Pot 10K (VR1)	23347-0030
Shakeproof washer (for VR1)	23348-0701
BNC Skt	4 off 22588-0004
Rear Panel	33331-1810
(transformer (2), rear panel earthing (1))	3 off 20234-0034
Solder tag s/proof 4BA	20037-0401
Nut M4	3 off 20210-0102
AC Mains receptacle	22520-0140
Shroud, mains recep	22458-9404
Fuse 125ma Anti-surge (for 220/240V input)	22315-0239
or	
Fuse 250mA Anti-surge (for 110V input)	22315-0232
Screw M3 x 10mml (AC mains recep securing)	2 off 20234-0011
Washer M3 s/proof	4 off 20037-0301
Nut M3	2 off 20210-0101
Transformer, mains	22115-0180
Switch, rocker for Mains	22219-0050
Sleeve for switch	4 off 10232-0304
Label, On/Off	37511-0470
Label, Warning, rear panel	37559-0260
Label, Serial No	37523-0160

Packaging Parts

Description		Part No
Carton		38113-0370
Sleeve for carton		38181-0211
Aircap	.42M off	10612-0204
Mains Lead (UK)		22491-0010
or		
Mains Lead (Euro)		22491-0020
or		
Mains Lead (USA)		22491-0070

THIS DOCUMENT CONTAINS PROPRIETARY INFORMATION AND DESIGN RIGHTS BELONGING TO WAVETEK AND MAY NOT BE REPRODUCED FOR ANY REASON EXCEPT CALIBRATION, OPERATION, AND MAINTENANCE WITHOUT WRITTEN AUTHORIZATION.

REV	ECO	BY	DATE	APP
1	7237A		4-8-81	CW
2	7189		5-7-81	CW
3				
B	59120-0509		1-4-91	
C			1-5-91	
D	CH NP 7461		1-9-92	CW

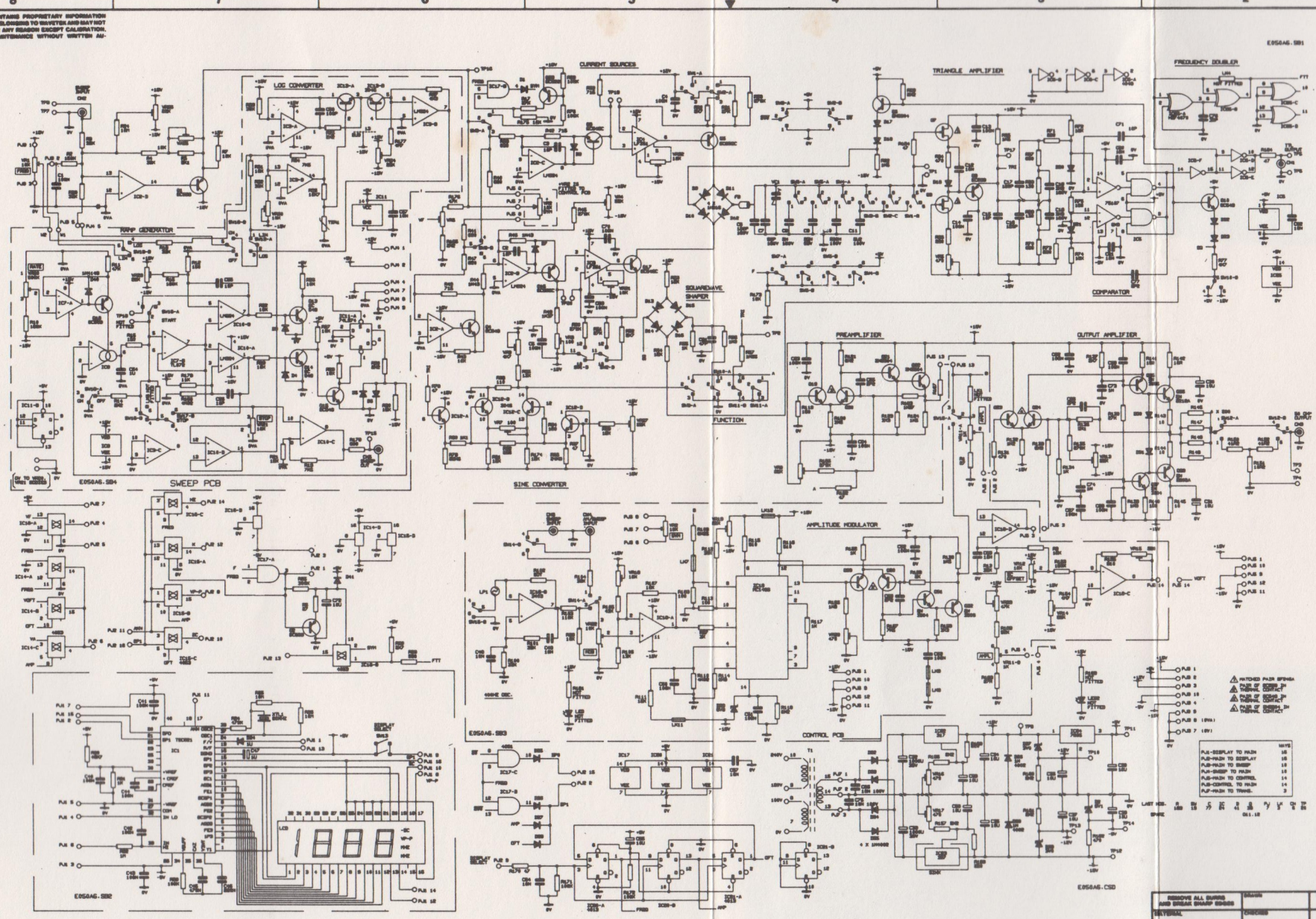

NOTE UNLESS OTHERWISE SPECIFIED

REMOVE ALL BURRS AND BREAK SHARP EDGES

MATERIAL

FINISH WAVETEK PROCESS

DRAWN | DATE
CHECKED
PROJ. ENGR.
RELEASE APPROV

UNLESS OTHERWISE SPECIFIED DIMENSIONS ARE IN INCHES TOLERANCES ARE: FRACTIONS DECIMALS ANGLES .XX ± .XXX ±

DO NOT SCALE DRAWING

WAVETEK SAN DIEGO • CALIFORNIA

TITLE: SCHEMATIC GENERATOR BOARD

SIZE	PROD NO.	DWG NO.	REV
D	23338	59120-0509	D

SCALE | MODEL 19 | SHEET 1 OF 1